ROUTE 40 CULVERT IMPROVEMENT CONSTRUCTION PLANS

KEYES BROOK CULVERT, GROTON ROAD
WESTFORD, MA

PLAN NOTES:

1. DEVIATION FROM AN APPROVED PLAN IS NOT PERMITTED WITHOUT THE WRITTEN APPROVAL OF APPLICABLE LOCAL BOARDS AND THIS OFFICE.
2. BOUNDARY INFORMATION SHOWN HEREON IS THE RESULT OF AN ON THE GROUND SURVEY CONDUCTED BY LANDTECH CONSULTANTS, INC. JANUARY 25 THROUGH FEBRUARY 28, 2012 AND FROM EXISTING DEEDS AND PLANS.
3. UTILITY INFORMATION SHOWN HEREON WAS TAKEN FROM INFORMATION SUPPLIED BY THE VARIOUS UTILITY COMPANIES. LOCATION AND SIZES OF ALL UTILITIES MUST BE FIELD VERIFIED BY ALL CONTRACTORS PRIOR TO THE START OF ANY CONSTRUCTION. 'DIG SAFE' MUST BE NOTIFIED A MINIMUM OF 72 HOURS IN ADVANCE PRIOR TO ANY EXCAVATION.
4. FLAGGED WETLAND LOCATIONS SHOWN ON THIS MAP WERE PROVIDED BY A FIELD STUDY CONDUCTED BY NORSE ENVIRONMENTAL SERVICES, INC., 130 MIDDLESEX ROAD, SUITE 15, TYNGSBORO, MA 01879, JANUARY 24, 2012 AND FIELD LOCATED BY LANDTECH CONSULTANTS, INC. JANUARY 25, 2012.

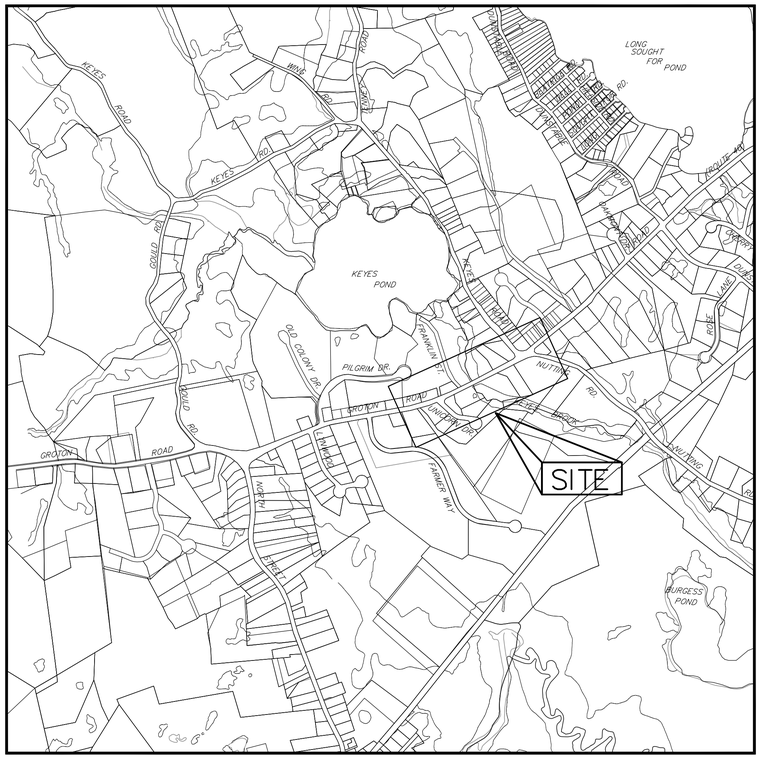

LOCUS MAP

SCALE: 1"=800'

0 800 1600 2400

SCALE IN FEET

ISSUED FOR BID DATE: APRIL 6, 2016

PLAN INDEX

1.	TITLE SHEET	
2.	EXISTING CONDITIONS PLAN	1 OF 3
3.	EXISTING CULVERT SECTIONS	2 OF 3
4.	EXISTING ELEVATIONS AND LONGITUDINAL SECTION	3 OF 3
5.	SITE PREPARATION PLAN	PR
6.	SITE PLAN	SP
7.	CULVERT SECTIONS	SC
8.	SECTIONS AND DETAILS	DS
9.	TEMPORARY TRAFFIC CONTROL PLAN	TTCP

SUPPLEMENTAL BRIDGE PLANS

1.	KEY PLAN, LOCUS, PROFILE, GENERAL NOTES AND INDEX	BR-1
2.	BORING LOGS AND PLAN	BR-2
3.	BRIDGE PLAN AND ELEVATION	BR-3
4.	FOUNDATION PLAN AND DETAILS	BR-4

CONSPAN PLANS

CONSTRUCTION DRAWINGS CT1-CT8

OWNER

TOWN OF WESTFORD
ENGINEERING DEPARTMENT
28 NORTH STREET
WESTFORD, MA 01886

LandTech Consultants
Engineering/Design/Surveying/Permitting
515 Groton Road, - Westford, MA 01886
Ph: (978) 692-6100 - landtechinc.com

COMMONWEALTH OF MASSACHUSETTS
MATTHEW A. WATERMAN
CIVIL
No. 45666
REGISTERED PROFESSIONAL ENGINEER

JOB No. 12-101 DRAWING No. 9514

Copyright © 2010
Reproduction of this plan in whole or part is prohibited without the written consent of the design engineer and/or firm.

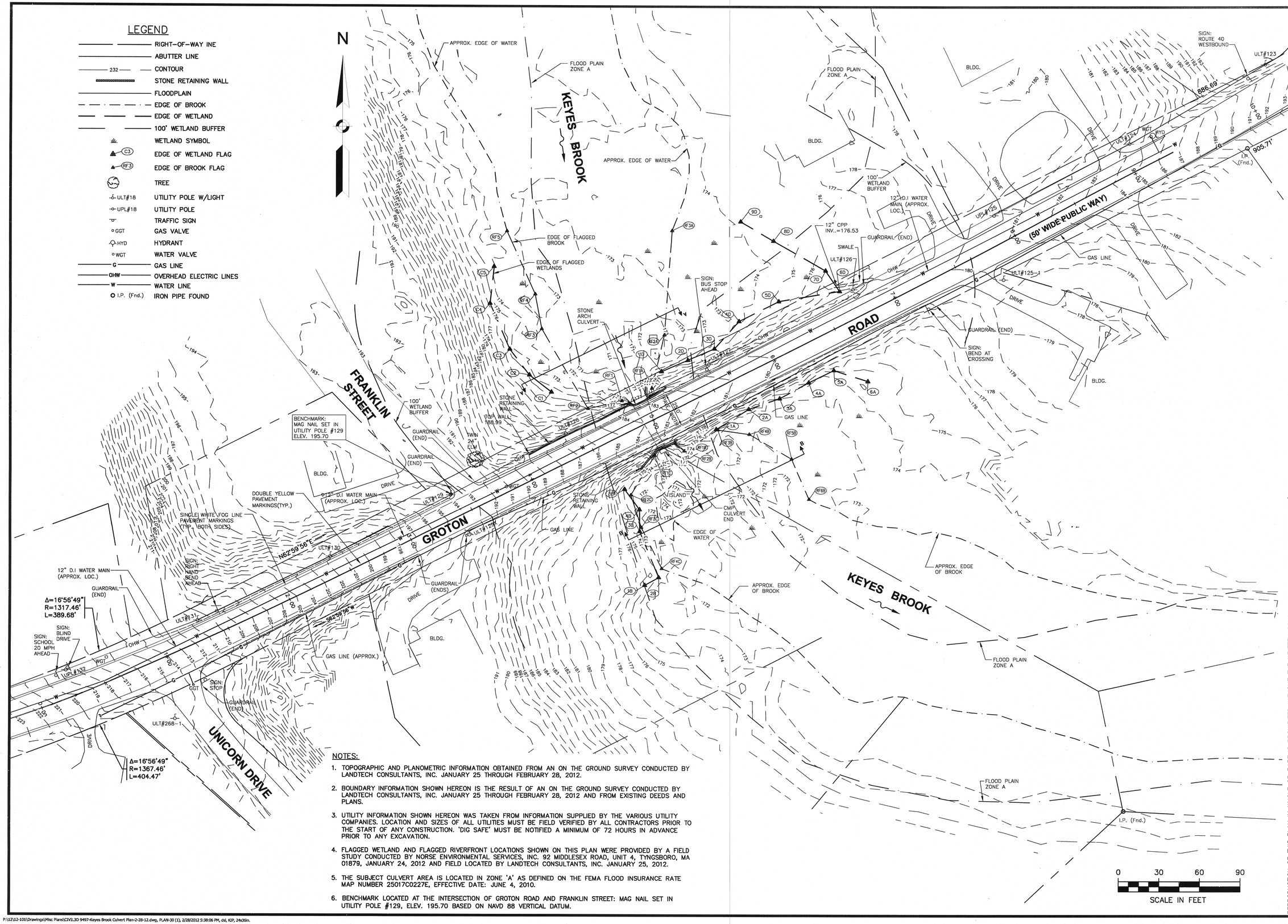

NOTES:

1. TOPOGRAPHIC AND PLANOMETRIC INFORMATION OBTAINED FROM AN ON THE GROUND SURVEY CONDUCTED BY LANDTECH CONSULTANTS, INC. JANUARY 25 THROUGH FEBRUARY 28, 2012.
2. BOUNDARY INFORMATION SHOWN HEREON IS THE RESULT OF AN ON THE GROUND SURVEY CONDUCTED BY LANDTECH CONSULTANTS, INC. JANUARY 25 THROUGH FEBRUARY 28, 2012 AND FROM EXISTING DEEDS AND PLANS.
3. UTILITY INFORMATION SHOWN HEREON WAS TAKEN FROM INFORMATION SUPPLIED BY THE VARIOUS UTILITY COMPANIES. LOCATION AND SIZES OF ALL UTILITIES MUST BE FIELD VERIFIED BY ALL CONTRACTORS PRIOR TO THE START OF ANY CONSTRUCTION. 'DIG SAFE' MUST BE NOTIFIED A MINIMUM OF 72 HOURS IN ADVANCE PRIOR TO ANY EXCAVATION.
4. FLAGGED WETLAND AND FLAGGED RIVERFRONT LOCATIONS SHOWN ON THIS PLAN WERE PROVIDED BY A FIELD STUDY CONDUCTED BY NORSE ENVIRONMENTAL SERVICES, INC. 92 MIDDLESEX ROAD, UNIT 4, TYNGSBORO, MA 01879, JANUARY 24, 2012 AND FIELD LOCATED BY LANDTECH CONSULTANTS, INC. JANUARY 25, 2012.
5. THE SUBJECT CULVERT AREA IS LOCATED IN ZONE 'A' AS DEFINED ON THE FEMA FLOOD INSURANCE RATE MAP NUMBER 25017C0227E, EFFECTIVE DATE: JUNE 4, 2010.
6. BENCHMARK LOCATED AT THE INTERSECTION OF GROTON ROAD AND FRANKLIN STREET: MAG NAIL SET IN UTILITY POLE #129, ELEV. 195.70 BASED ON NAVD 88 VERTICAL DATUM.

DATE	REVISION	BY

PREPARED FOR:
TOWN OF GROTON
55 MAIN STREET
WESTFORD, MA 01886

FLD. BK.	DRAFT	CHECK
444	DSL	CML

EXISTING CONDITIONS PLAN
KEYES BROOK CULVERT
GROTON ROAD (ROUTE 40)
WESTFORD, MA

SCALE: 1"= 30'

FEBRUARY 28, 2012

REPRODUCTION OF THIS PLAN IN WHOLE OR PART IS PROHIBITED WITHOUT THE WRITTEN CONSENT OF THE DESIGN ENGINEER AND/OR FIRM.

LandTech Consultants
Engineering/Design/Surveying/Permitting
515 Groton Road, – Westford, MA 01886
Ph: (978) 692-6100 – landtechinc.com

JOB NO.	DWG. NO.	SHEET
12-101	9497	1 OF 3

P:\12\12-101\Drawings\Misc Plans\CIVIL3D 9497-Keyes Brook Culvert Plan-2-28-12.dwg, PLAN-30 (1), 2/28/2012 5:38:06 PM, dsl, KIP, 24x36in.

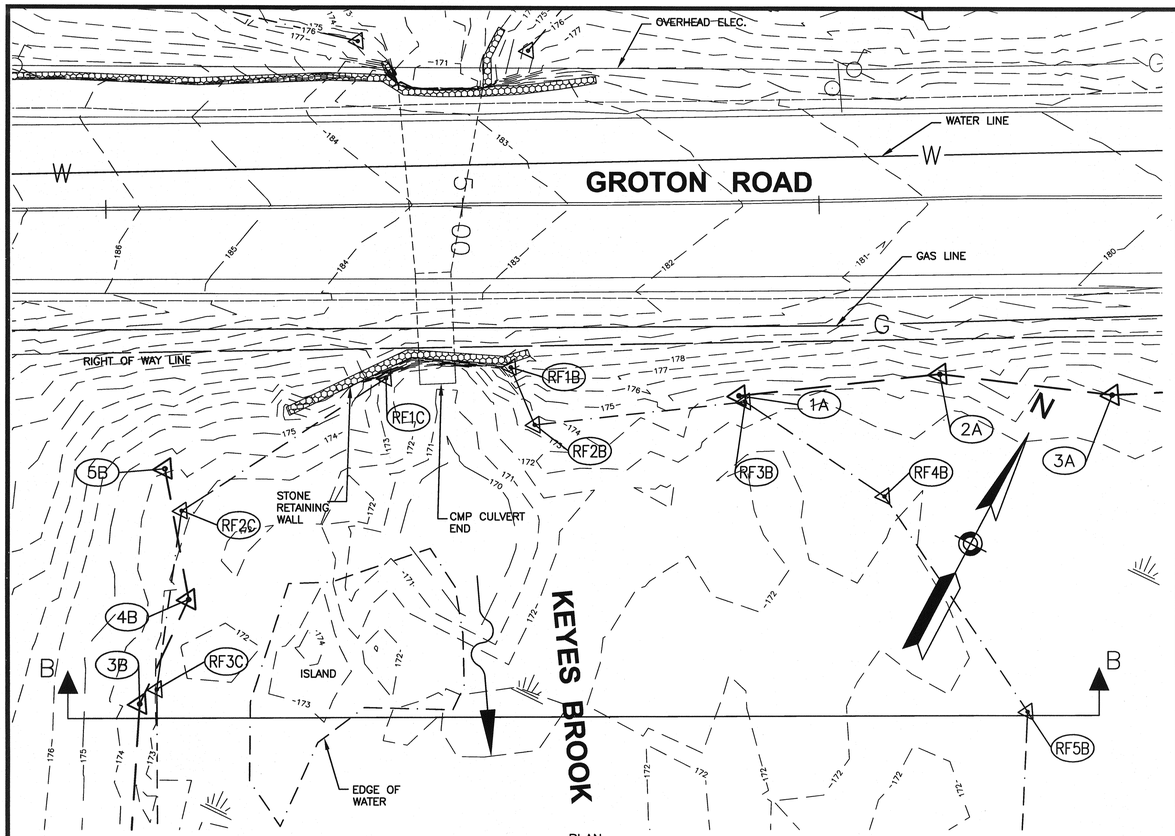

PLAN

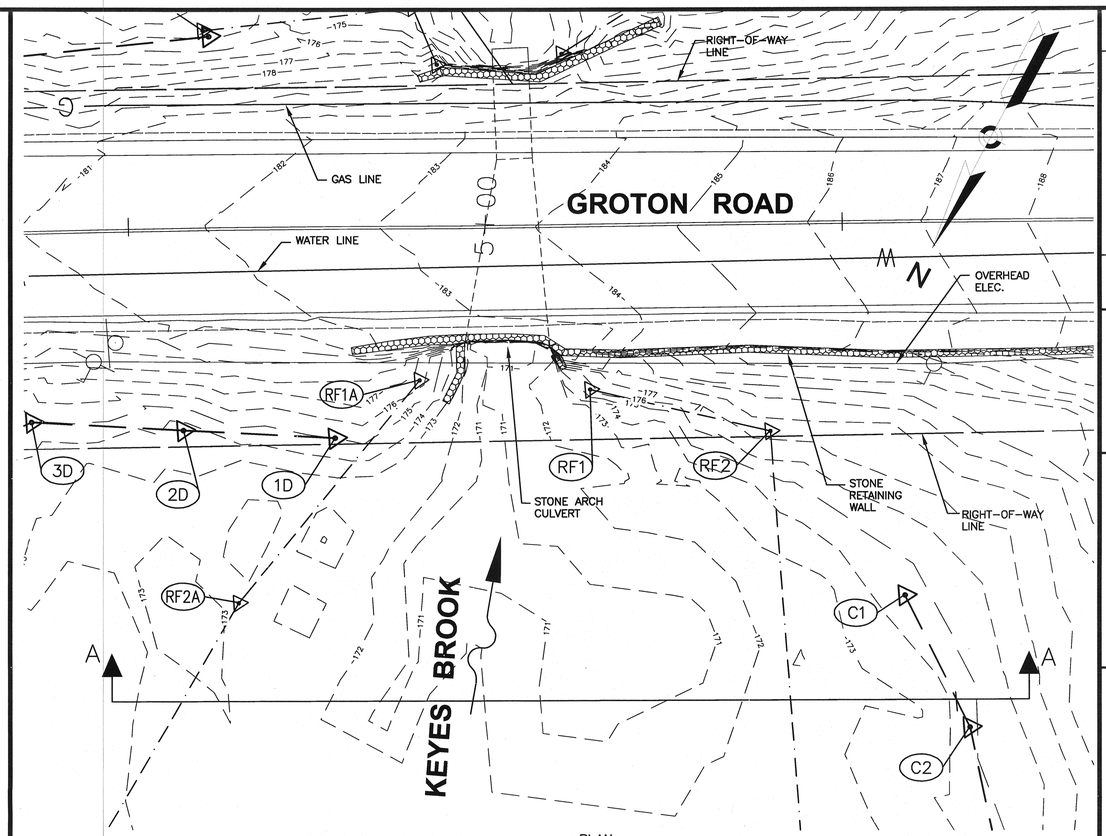

PLAN

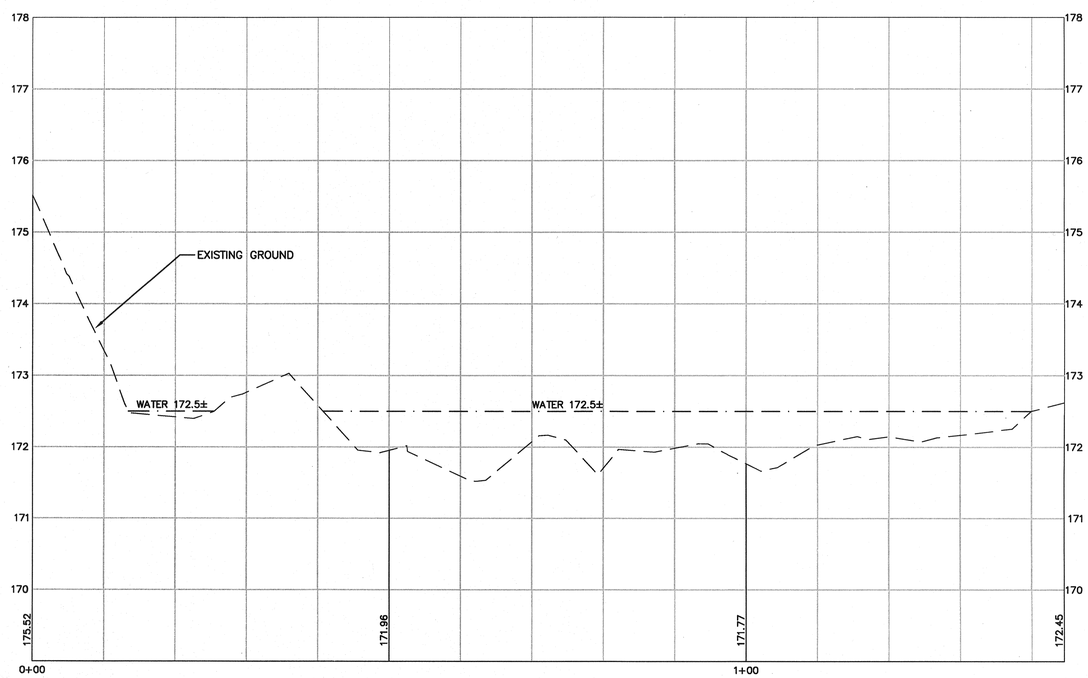

CROSS-SECTION B-B

SCALE: HORIZ: 1"=10, VERT: 1"=1'

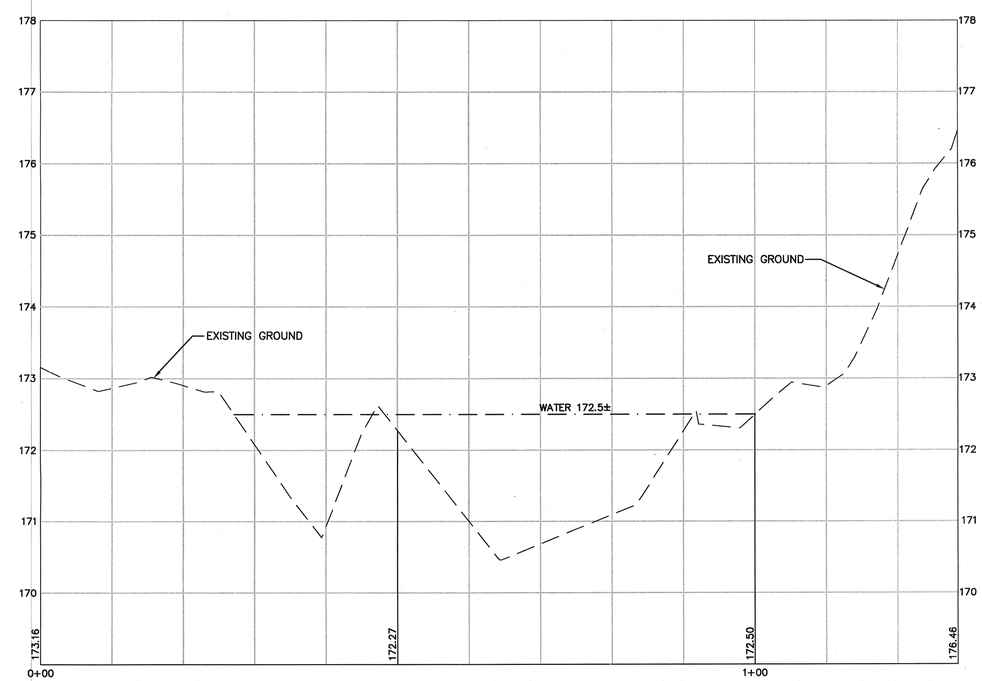

CROSS-SECTION A-A

SCALE: HORIZ: 1"=10, VERT: 1"=1'

DATE	REVISION	BY

PREPARED FOR:
TOWN OF GROTON
55 MAIN STREET
WESTFORD, MA 01886

FLD. BK.	DRAFT	CHECK
444	DSL	CML

EXISTING CULVERT SECTIONS
KEYES BROOK CULVERT

GROTON ROAD (ROUTE 40)
WESTFORD, MA

FEBRUARY 28, 2012

SCALE: 1" = 10'

LandTech Consultants, Inc.
Engineering/Design/Surveying/Permitting
215 Groton Road, Westford, MA 01886
Ph. (978) 692-8100 – landtechinc.com

JOB NO.	DWG. NO.	SHEET
12-101	9497	2 OF 3

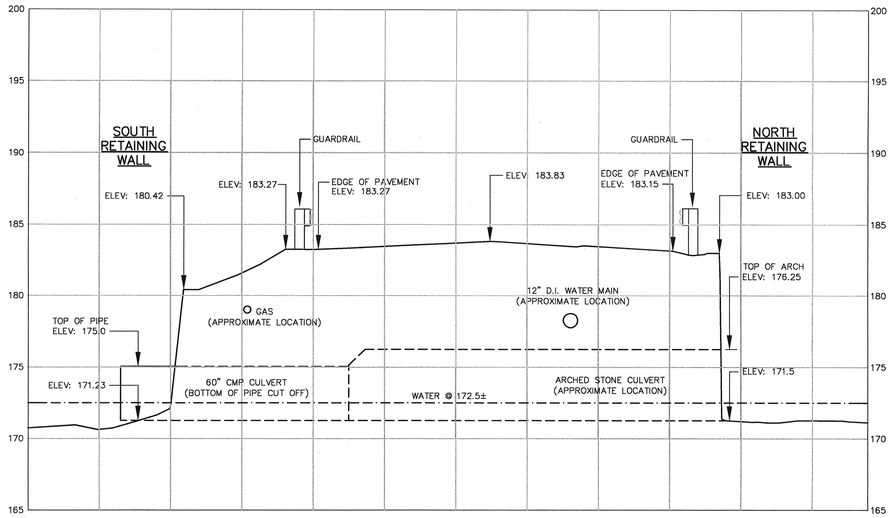

CULVERT LONGITUDINAL SECTION – LOOKING WEST

ELEVATION – NORTH SIDE
POINT CLOUD RENDERING
NOT TO SCALE

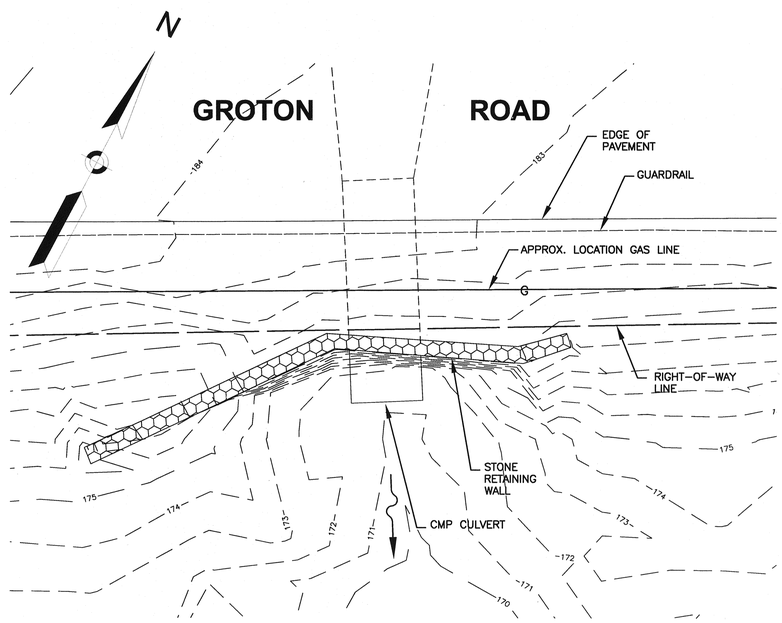

PLAN – SOUTH SIDE

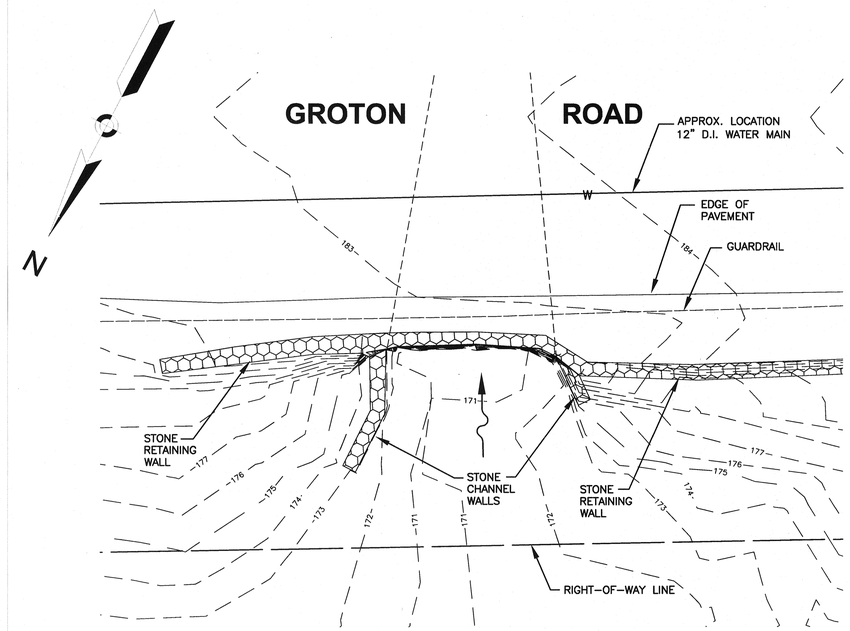

PLAN – NORTH SIDE

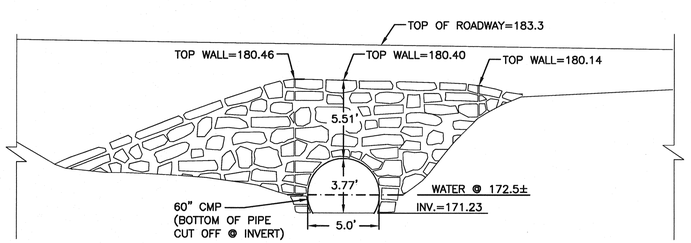

ELEVATION – SOUTH SIDE

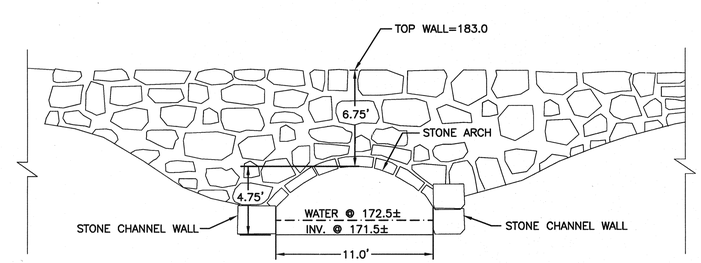

ELEVATION – NORTH SIDE

CULVERT ELEVATIONS
SCALE: 1" = 5'

DATE	REVISION	BY

PREPARED FOR:
TOWN OF GROTON
55 MAIN STREET
WESTFORD, MA 01886

FLD. BK.	DRAFT	CHECK
444	DSL	CML

EXISTING ELEVATIONS & LONGITUDINAL SECTION
KEYES BROOK CULVERT
GROTON ROAD (ROUTE 40)
WESTFORD, MA

FEBRUARY 28, 2012

SCALE: 1"= 5' (UNLESS NOTED)

LandTech Consultants
Engineering/Design/Surveying/Permitting
515 Groton Road, – Westford, MA 01886
Ph: (978) 692-6100 – landtechinc.com

JOB NO.	DWG. NO.	SHEET
12-101	9497	3 OF 3

P:\12\12-101\Drawings\Misc Plans\CIVIL3D 9497-Keyes Brook Culvert Plan-2-28-12.dwg, ELEVS-5 (3), 2/29/2012 8:08:58 AM, dsl, KIP, 24x36in.

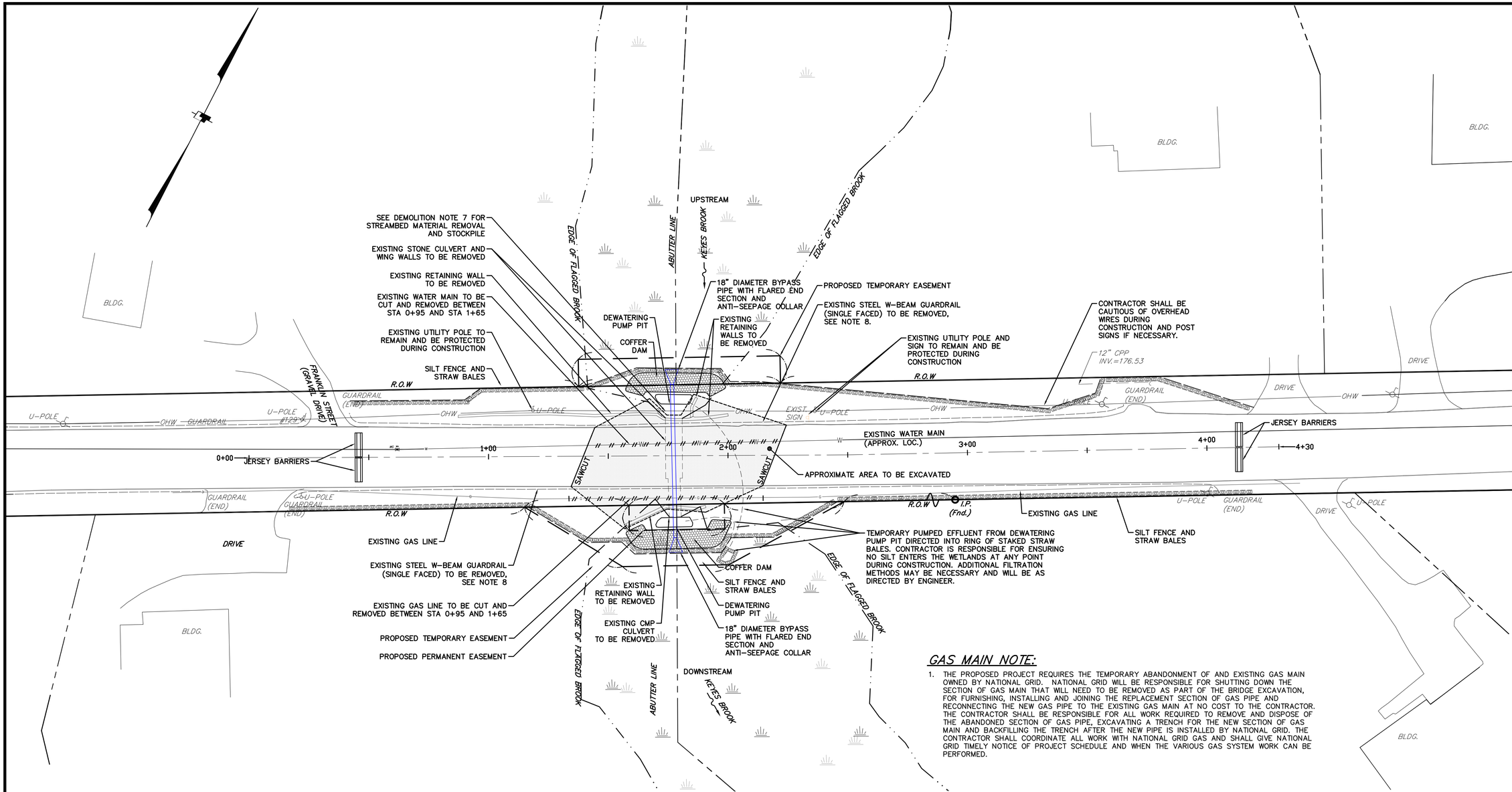

GAS MAIN NOTE:

1. THE PROPOSED PROJECT REQUIRES THE TEMPORARY ABANDONMENT OF AND EXISTING GAS MAIN OWNED BY NATIONAL GRID. NATIONAL GRID WILL BE RESPONSIBLE FOR SHUTTING DOWN THE SECTION OF GAS MAIN THAT WILL NEED TO BE REMOVED AS PART OF THE BRIDGE EXCAVATION, FOR FURNISHING, INSTALLING AND JOINING THE REPLACEMENT SECTION OF GAS PIPE AND RECONNECTING THE NEW GAS PIPE TO THE EXISTING GAS MAIN AT NO COST TO THE CONTRACTOR. THE CONTRACTOR SHALL BE RESPONSIBLE FOR ALL WORK REQUIRED TO REMOVE AND DISPOSE OF THE ABANDONED SECTION OF GAS PIPE, EXCAVATING A TRENCH FOR THE NEW SECTION OF GAS MAIN AND BACKFILLING THE TRENCH AFTER THE NEW PIPE IS INSTALLED BY NATIONAL GRID. THE CONTRACTOR SHALL COORDINATE ALL WORK WITH NATIONAL GRID GAS AND SHALL GIVE NATIONAL GRID TIMELY NOTICE OF PROJECT SCHEDULE AND WHEN THE VARIOUS GAS SYSTEM WORK CAN BE PERFORMED.

GENERAL NOTES:

1. EROSION CONTROL BARRIERS ARE TO BE INSPECTED WEEKLY, AND AFTER EACH SIGNIFICANT RAINFALL EVENT. ANY REPAIRS SHALL BE MADE IMMEDIATELY.
2. ANY MATERIALS ENTERING THE WETLANDS SHALL BE REMOVED IMMEDIATELY BY HAND OR WITH HAND TOOLS ONLY, NO HEAVY EQUIPMENT IS TO BE USED.
3. STUMPS AND BRUSH MAY BE EITHER GROUND UP OR DISPOSED OF OFF SITE. NO STUMPS ARE TO BE STOCKPILED WITHIN 100 FEET OF A WETLAND.
4. EQUIPMENT AND MATERIALS SHALL NOT BE STORED WITHIN WETLAND.
5. VEHICLE REFUELING SHALL NOT OCCUR WITHIN 100 FEET OF A WETLAND.
6. ALL CONSTRUCTION DEBRIS SHALL BE DISPOSED OF OFF SITE.

DEMOLITION NOTES:

1. ANY HAZARDOUS MATERIALS ENCOUNTERED DURING DEMOLITION SHALL BE REMOVED TO A LICENSED DISPOSAL FACILITY.
2. PRIOR TO DEMOLITION OF ANY UTILITY LINES, THE CONTRACTOR SHALL COORDINATE WITH THE APPROPRIATE UTILITY COMPANY TO DETERMINE SCOPE OF WORK.
3. INSTALL JERSEY BARRIERS AT LOCATIONS SHOWN ON THE PLAN. NO DEMOLITION EQUIPMENT OR DEMOLITION OPERATIONS SHALL OCCUR OUTSIDE OF THESE BARRIERS.
4. INSTALL SILT FENCE AND STRAW BALE BARRIERS AS SHOWN ON PLANS AND IN ACCORDANCE WITH THE DETAILS AND STANDARD BMP MEASURES.
5. KEEP PUBLIC STREETS CLEAR OF DUST, MUD AND DEBRIS. SURFACE MUST BE SWEPT AT THE CLOSE OF EACH WORK DAY AND AT OTHER INTERVALS AS NECESSARY TO AVOID TRACKING OF MUD OR CREATION OF DUST.
6. CONTACT DIG-SAFE AT LEAST 72 HOURS, NOT INCLUDING SATURDAYS, SUNDAYS, AND LEGAL MASSACHUSETTS HOLIDAYS, BUT NOT MORE THAN 20 CALENDAR DAYS PRIOR TO THE COMMENCEMENT OF EXCAVATION.
7. ANY MATERIAL REMOVED FROM THE EXISTING STREAMBED FOR PURPOSES OF CONSTRUCTION, INCLUDING BUT NOT LIMITED TO BOULDERS, ROCKS, SOIL, AND OTHER NATURAL SUBSTRATE TO BE STOCKPILED ON SITE AND USED BY THE CONTRACTOR TO RECONSTRUCT THE STREAMBED.
8. ALL REMOVED GUARDRAIL TO BE DELIVERED TO THE WESTFORD HIGHWAY DEPARTMENT AS DIRECTED BY THE OWNER.

CONSTRUCTION SEQUENCING:

1. INSTALL EROSION CONTROL MEASURES IN COMPLIANCE WITH THE PLANS INCLUDING SILT FENCE AND STRAW BALES. FIELD LOCATION OF SILT FENCE AND STRAW BALES TO BE APPROVED BY THE CONSERVATION COMMISSION, ITS AGENT, OR THE ENGINEER. ADJUST SILT FENCE AND STRAW BALES AS DIRECTED. DO NOT COMMENCE CONSTRUCTION UNTIL THE EROSION CONTROLS HAVE BEEN APPROVED.
2. INSTALL BYPASS PIPE WITH ANTI-SEEPAGE COLLAR TO MAINTAIN KEYES BROOK CONTINUITY DURING CONSTRUCTION. CONTRACTOR TO PROVIDE PUMPS AS NECESSARY TO DIVERT FLOW FROM THE UPSTREAM SIDE TO THE DOWNSTREAM SIDE IF THE UPSTREAM WATER ELEVATION RAISES MORE THAN 12-INCHES OR HIGHER THAN ELEV. 173.0 AT ANY POINT DURING CONSTRUCTION. THE CONTRACTOR WILL BE RESPONSIBLE FOR ENSURING THAT THE WATER ELEVATIONS DO NOT CREATE ANY FLOODING THAT ADVERSELY IMPACTS PRIVATE PROPERTY OR WETLAND RESOURCE AREAS.
3. INSTALL COFFER DAMS AND PUMP PITS TO GRADUALLY DEWATER THE CONSTRUCTION SITE. DIRECT PUMPED EFFLUENT INTO A RING OF STAKED STRAW BALES ON THE DOWNSTREAM SIDE AS SHOWN ON THE PLANS.
4. ONCE THE AREA WITHIN THE COFFER DAM IS DEWATERED, COORDINATE WITH THE TOWN OF WESTFORD HIGHWAY DEPARTMENT FOR ROADWAY CLOSURE AND COMMENCE EXCAVATION TO SUBGRADE.
5. COMPLETE DEMOLITION OF ROADWAY, CULVERT, HEAD WALLS, WING WALLS, RETAINING WALLS, GUARDRAIL, AND UTILITIES WITHIN THE LIMIT OF WORK AS SHOWN ON THE PLANS. PROTECT BYPASS PIPE DURING DEMOLITION.
6. PREPARE CULVERT FOOTPRINT AREA TO BE SUITABLE FOR FOOTINGS. PLACE FOOTINGS PER MANUFACTURERS INSTRUCTION. POUR CONCRETE IN AREAS INDICATED ON STRUCTURAL PLANS.
7. BACKFILL FOOTINGS WITH MATERIAL AS SPECIFIED TO SUBGRADE.
8. ANY STOCKPILE OF MATERIALS SHALL BE LOCATED OUTSIDE OF THE RESOURCE AREA AND SURROUNDED WITH STRAW BALES TO KEEP SEDIMENT FROM GETTING INTO THE RESOURCE AREAS.
9. RESTORE THE STREAMBED AS SPECIFIED AND DIRECTED BY THE ENGINEER. THE CONTRACTOR IS RESPONSIBLE FOR RESTORING THE STREAMBED TO THE ORIGINAL CONDITION PRIOR TO COMPLETION OF CONSTRUCTION.
10. INSTALL PRECAST HEADWALLS, WINGWALLS AND CULVERT SECTIONS IN ACCORDANCE WITH MANUFACTURER'S SPECIFICATIONS.
11. GROUT CULVERT SECTIONS, HEADWALL AND WINGWALLS IN PLACE. HAND RAKE LOAM TO FINISH GRADE CONCURRENTLY WITH THE INSTALLATION OF EACH CULVERT WINGWALL. SEED AND COVER WITH EROSION CONTROL MATTING OR RIP-RAP AS SHOWN ON THE PLAN AND DETAILS.
12. REMOVE BYPASS PIPE AND GRADUALLY REMOVE COFFER DAM BEGINNING AT DOWN GRADIENT END. DISCARD ANY SEDIMENT IN ACCORDANCE WITH LOCAL OR STATE REGULATIONS. SILTATION FENCING IS TO REMAIN UNTIL ALL DISTURBED AREAS HAVE STABILIZED AND UPON APPROVAL OF THE CONSERVATION COMMISSION OR ITS AGENT.
13. LOAM AND SEED ALL DISTURBED AREAS UNLESS OTHERWISE NOTED. PLACE EROSION CONTROL MATTING ON SLOPES IN EXCESS OF 2:1.
14. COMPLETE THE ROADWAY AND UTILITY RECONSTRUCTION AND PAVEMENT OVERLAY. RESTORE GUARDRAIL AND ANY OTHER ITEMS TEMPORARILY RELOCATED DURING CONSTRUCTION.
15. REMOVE SILT FENCE ONCE ALL DISTURBED AREAS HAVE STABILIZED AND UPON APPROVAL OF THE CONSERVATION COMMISSION OR ITS AGENT.

SCALE: 1" = 20'

0 20 40 60

SCALE IN FEET

DATE	REVISION	BY

COMMONWEALTH OF MASSACHUSETTS MATTHEW A. WATERMAN No. 48866 REGISTERED PROFESSIONAL ENGINEER

PREPARED FOR:
TOWN OF WESTFORD
ENGINEERING DEPARTMENT
28 NORTH STREET
WESTFORD, MA 01886

DESIGN	DRAFT	CHECK
ART	ART	CML

SITE PREPARATION PLAN
KEYES BROOK CULVERT
GROTON ROAD (ROUTE 40)
WESTFORD, MA

APRIL 6, 2016

SCALE: 1"= 20'

LandTech Consultants
Engineering/Design/Surveying/Permitting
515 Groton Road, - Westford, MA 01886
Ph: (978) 692-6100 - landtechinc.com

COPYRIGHT © 2012

JOB NO.	DWG. NO.	SHEET
12-101	9514	PR

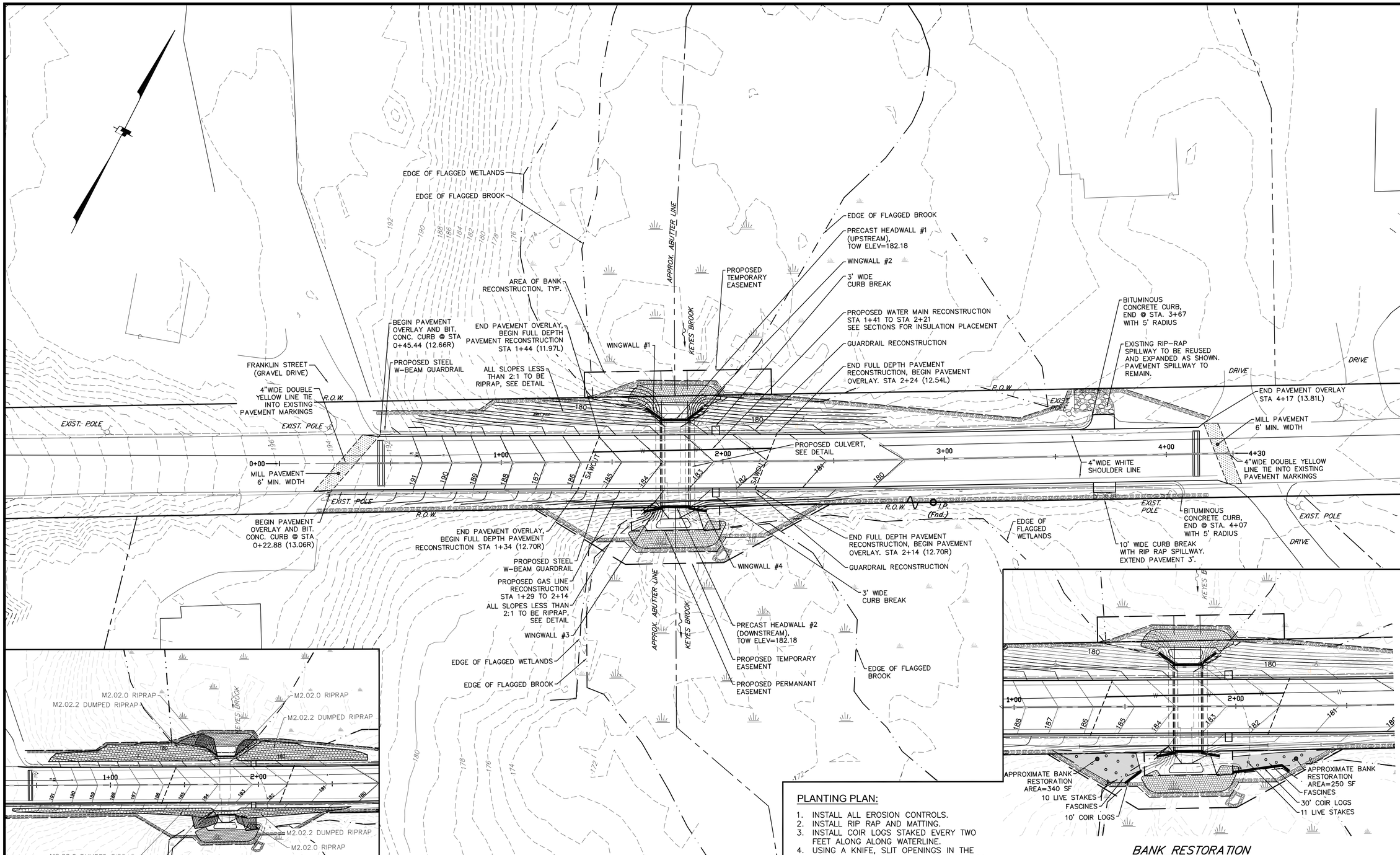

SITE PLAN

SCALE: 1" = 20'

0 20 40 60

SCALE IN FEET

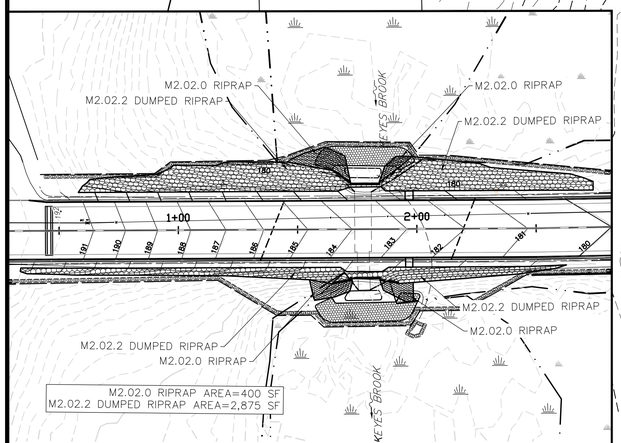

RIP RAP AREAS

SCALE: 1" = 30'

NOTES:

1. REFER TO RIP-RAP SLOPE DETAIL FOR SIZE AND PLACEMENT OF MATERIAL.

PLANTING PLAN:

1. INSTALL ALL EROSION CONTROLS.
2. INSTALL RIP RAP AND MATTING.
3. INSTALL COIR LOGS STAKED EVERY TWO FEET ALONG ALONG WATERLINE.
4. USING A KNIFE, SLIT OPENINGS IN THE MATTING AND COIR AND PLANT TUBELINGS.
5. TUBELINGS SHOULD BE ONE FOOT TO TWO FEET APART.
6. QUANTITY OF PLANTS WILL BE BASED ON THE LENGTH OF THE BANK THAT IS DISTURBED (40 FEET).
7. PLACE HORIZONTAL FASCINES BEHIND THE STAKED COIR LOGS BOUND TOGETHER WITH BIODEGRADABLE TWINE.
8. COVER ROOTED END OF THE FASCINE WITH SOIL LEAVING THE GROWING TIPS EXPOSED TO AIR AND SUNLIGHT.
9. PROVIDE A MINIMUM OF ONE STAKE PER FASCINE TO INSURE THEY DO NOT GET WASHED AWAY.

BANK RESTORATION

SCALE: 1" = 20'

NOTES:

1. FINAL NUMBER, TYPE, AND LOCATION OF PLANTS TO BE APPROVED IN THE FIELD BY THE WETLAND SCIENTIST AND/OR CONSERVATION COMMISSION AGENT.
2. TOTAL LENGTH COIR LOGS = 40 FEET
   TOTAL LENGTH FASCINES = 40 FEET
   TOTAL NUMBER OF LIVE STAKES = 21
3. APPROPRIATE SPECIES FOR LIVE STAKES: PUSSY WILLOW, BLACK WILLOW, SAND BAR WILLOW, PURPLE-OSIER WILLOW, DWARF BANKERS WILLOW, DOGWOOD SPECIES, OR SPECIES APPROVED BY THE WETLAND SCIENTIST AND/OR CONSERVATION COMMISSION AGENT.

DATE	REVISION	BY

COMMONWEALTH OF MASSACHUSETTS
MATTHEW A. WATERMAN
No. 46866
REGISTERED PROFESSIONAL ENGINEER

PREPARED FOR:
TOWN OF WESTFORD
ENGINEERING DEPARTMENT
28 NORTH STREET
WESTFORD, MA 01886

DESIGN	DRAFT	CHECK
ART	ART	CML

SITE PLAN
KEYES BROOK CULVERT
GROTON ROAD (ROUTE 40)
WESTFORD, MA

APRIL 6, 2016

SCALE: 1" = 20'

Landtech Consultants
Engineering/Design/Surveying/Permitting
515 Groton Road, - Westford, MA 01886
Ph: (978) 692-6100 - landtechinc.com

COPYRIGHT © 2012
REPRODUCTION OF THIS PLAN IN WHOLE OR PART IS PROHIBITED WITHOUT THE WRITTEN CONSENT OF THE DESIGN ENGINEER AND/OR FIRM.

JOB NO.	DWG. NO.	SHEET
12-101	9514	SP

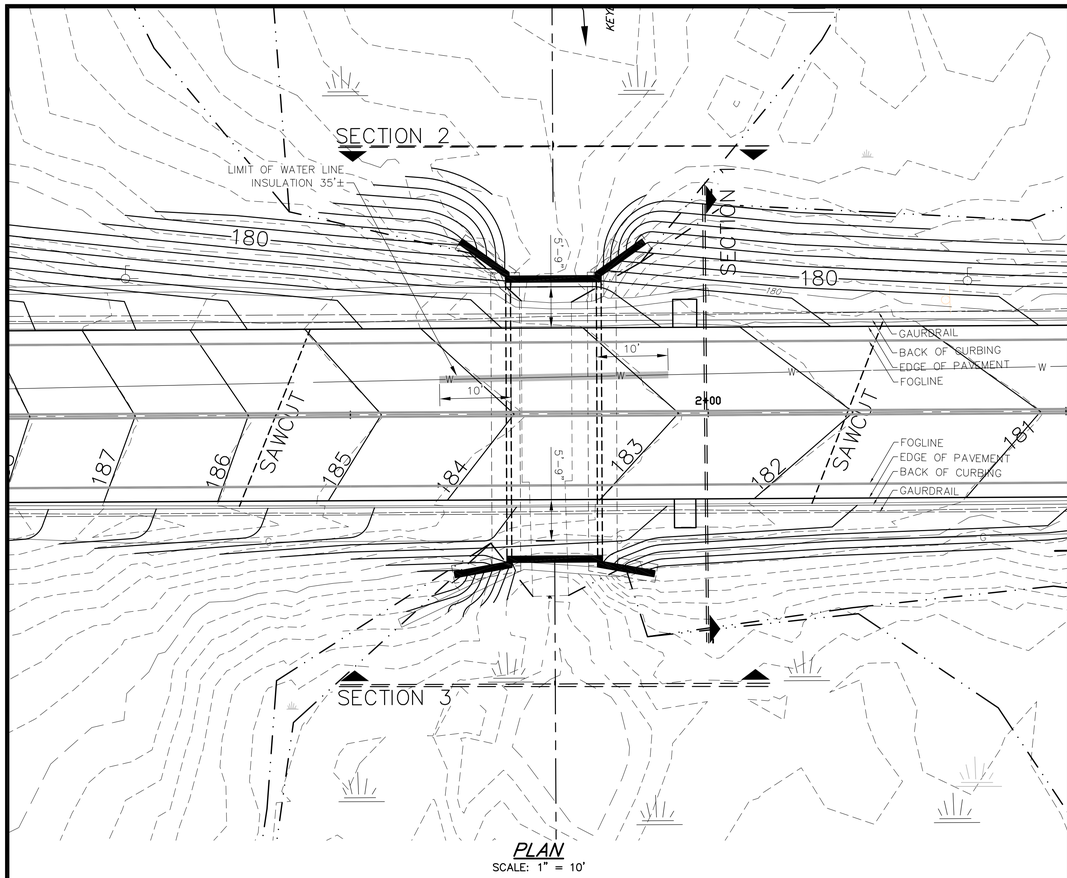

PLAN
SCALE: 1" = 10'

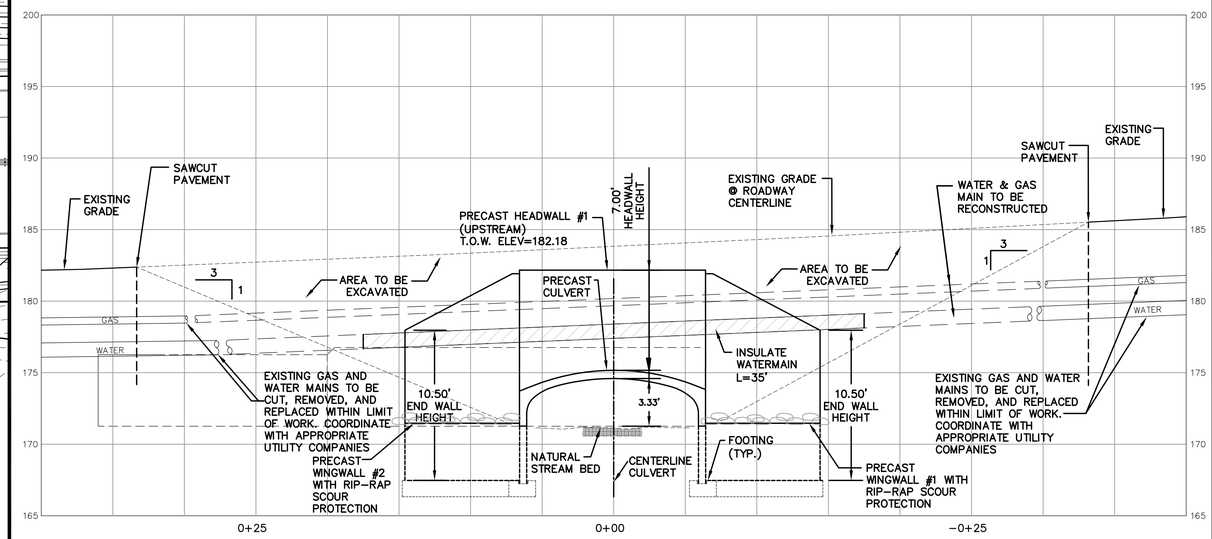

SECTION 2
CULVERT CROSS SECTION – UPSTREAM
SCALE: 1" = 5'

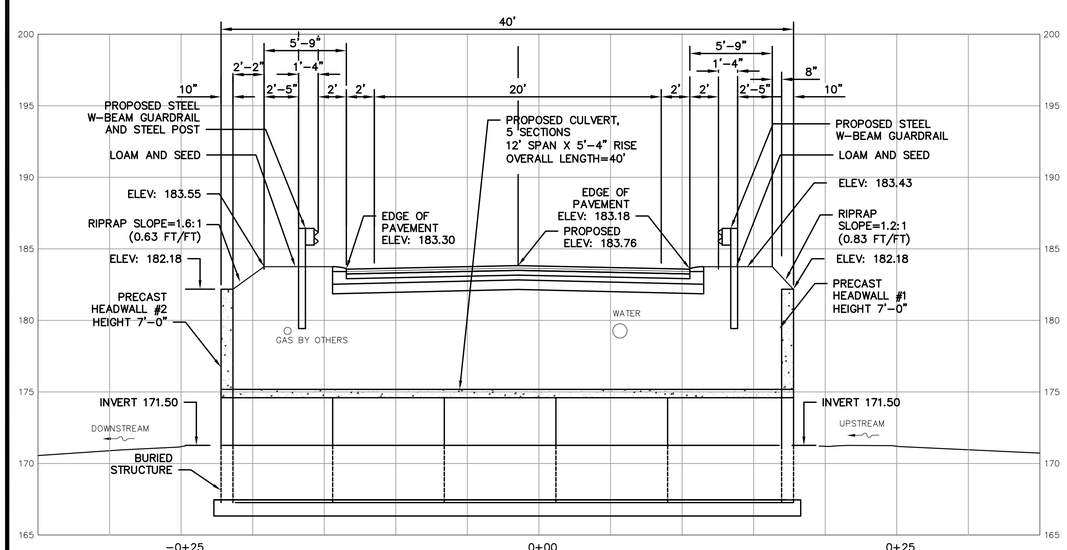

SECTION 1
CULVERT LONGITUDINAL SECTION
SCALE: 1" = 5'

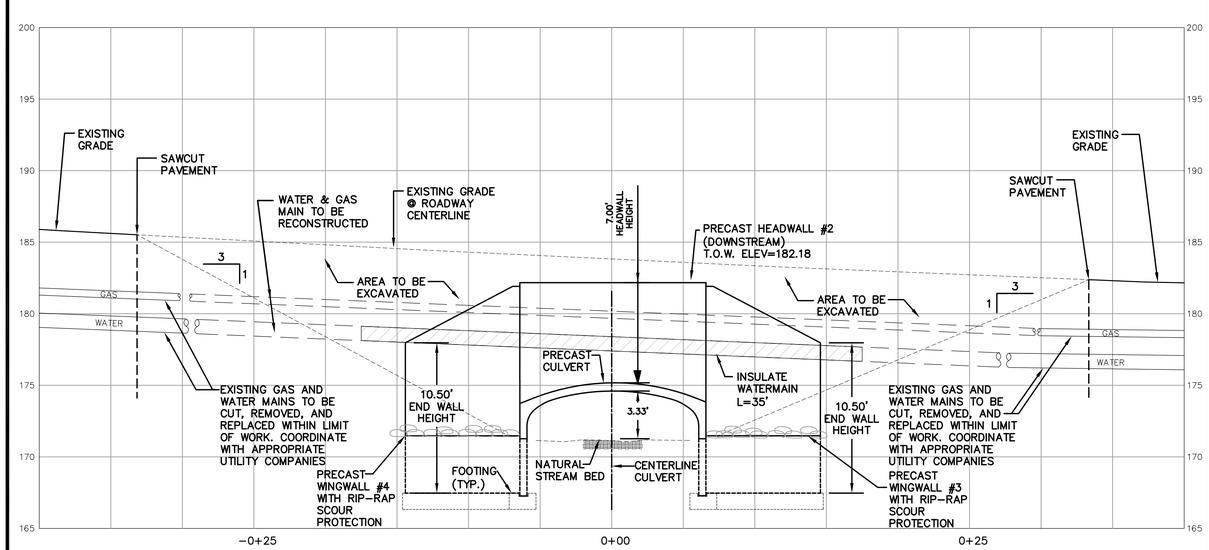

SECTION 3
CULVERT CROSS SECTION – DOWNSTREAM
SCALE: 1" = 5'

DATE	REVISION	BY

COMMONWEALTH OF MASSACHUSETTS MATTHEW A. WATERMAN No. 47866 REGISTERED PROFESSIONAL ENGINEER

PREPARED FOR:
TOWN OF WESTFORD
ENGINEERING DEPARTMENT
28 NORTH STREET
WESTFORD, MA 01886

DESIGN	DRAFT	CHECK
ART	ART	CML

CULVERT SECTIONS
KEYES BROOK CULVERT
GROTON ROAD (ROUTE 40)
WESTFORD, MA

APRIL 6, 2016

SCALE: 1"= 10'

LandTech Consultants
Engineering/Design/Surveying/Permitting
515 Groton Road, – Westford, MA 01886
Ph: (978) 692-6100 – landtechinc.com

COPYRIGHT © 2012

JOB NO.	DWG. NO.	SHEET
12-101	9514	SC

NOTE: BITUMINOUS CONCRETE BERM TO BE MONOLITHIC AND PLACED BY THE PAVER AS PART OF THE TOP COURSE.

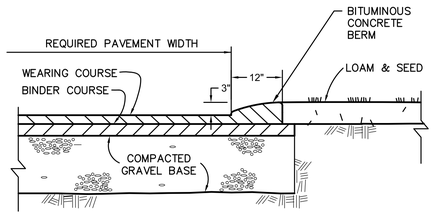

BITUMINOUS CONCRETE BERM

NOT TO SCALE

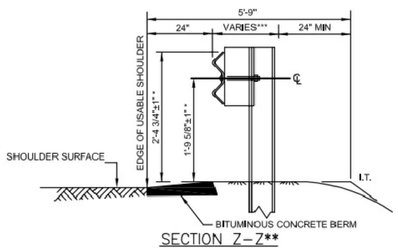

TYPE "A" BERM ALONG EDGE OF SHOULDER
OR AS NOTED ON PLAN SET

STEEL W BEAM HIGHWAY GUARD SECTION

NOT TO SCALE

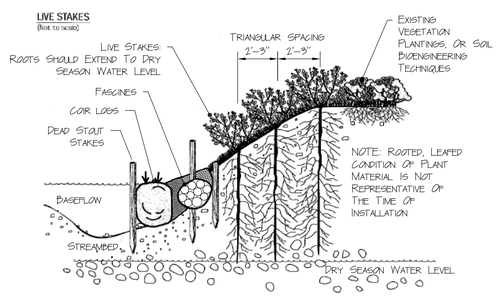

RIVER FRONT BANK RESTORATION

NOT TO SCALE

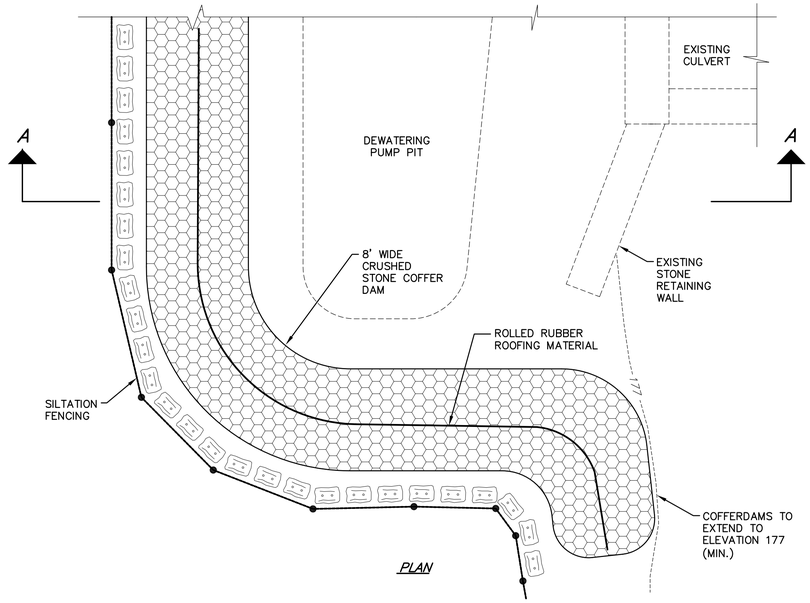

PLAN

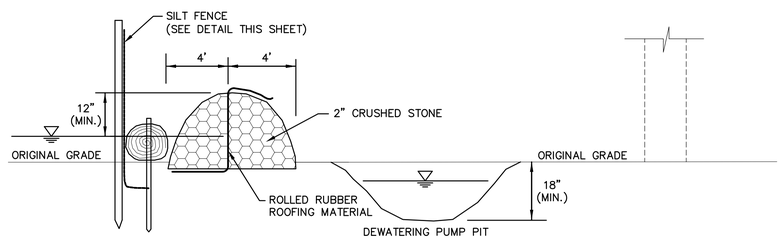

SECTION A–A

INSTALLATION SEQUENCE

1. INSTALL SILTATION FENCING BEGINNING AT THE UPGRADIENT ENDS OF THE COFFER DAMS.
2. PLACE RUBBER ROOFING MATERIAL AND SECURE WITH RIPRAP. BEGIN AT THE UPGRADIENT END OF THE COFFER DAM AND LEAVE A 3–FOOT WIDE OPENING AT THE LOWEST SPOT IN THE DOWN– GRADIENT END.
3. ALLOW ENCLOSED AREA TO DRAIN. EXCAVATE A SMALL TRENCH TOWARD THE OPENING IN THE COFFER DAM IF NECESSARY.
4. AFTER THE ENCLOSED AREAS HAVE COMPLETELY DRAINED, CLOSE REMAINDER OF COFFER DAM.

COFFER DAM & DEWATERING PUMP PIT

NOT TO SCALE

Typical Installation Detail

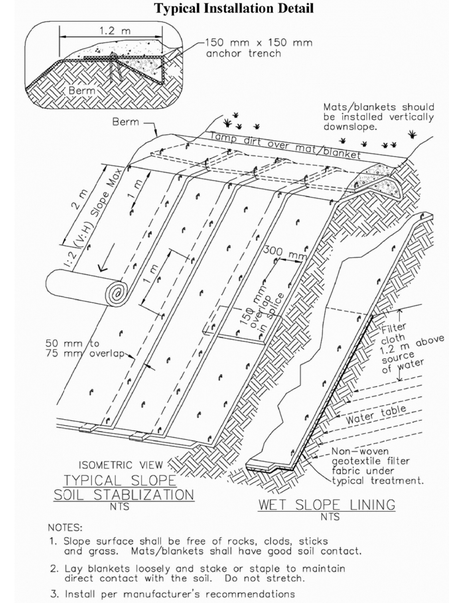

NOTES:

1. Slope surface shall be free of rocks, clods, sticks and grass. Mats/blankets shall have good soil contact.
2. Lay blankets loosely and stake or staple to maintain direct contact with the soil. Do not stretch.
3. Install per manufacturer's recommendations

SLOPE STABILIZATION MATTING

NOT TO SCALE

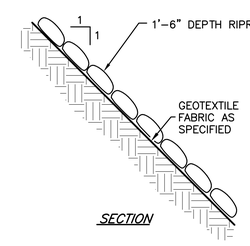

SECTION

RIPRAP SPECIFICATIONS

- RIPRAP TO PREVENT SCOURING – M2.02.0 RIPRAP
- RIPRAP FOR SLOPES – M2.02.2 DUMPED RIPRAP

SEE SITE PLAN FOR RIPRAP LOCATIONS

RIPRAP SLOPE DETAIL

NOT TO SCALE

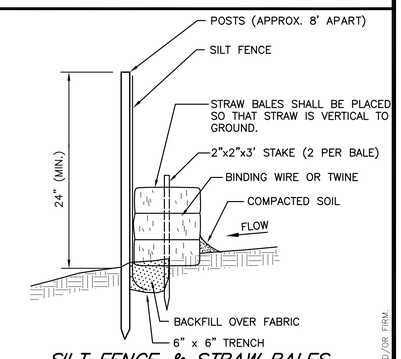

SILT FENCE & STRAW BALES

NOT TO SCALE

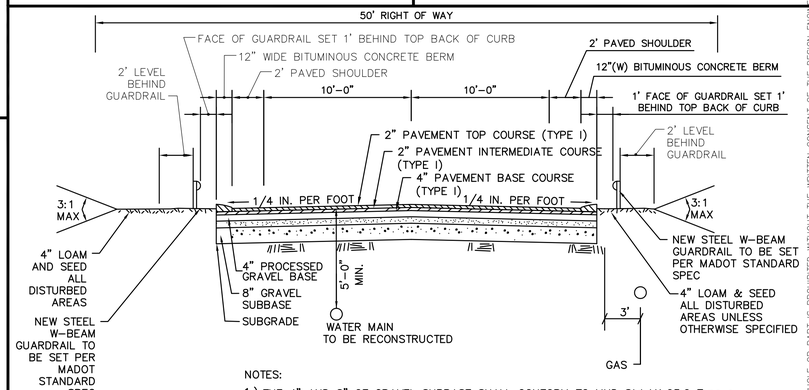

NOTES:

1.) THE 4" AND 8" OF GRAVEL SUBBASE SHALL CONFORM TO MHD Std M1.03.0 Type c.

2.) CONTRACTOR MUST SUPPLY CERTIFICATION (AND SIEVE ANALYSIS) FOR THE GRAVEL SUBBASE TO TOWN ENGINEER BEFORE MATERIAL IS PLACED IN FIELD.

3.) WATER MAIN SHALL BE DUCTILE IRON PIPE CLASS 52.

4.) WATER MAIN SHALL BE PRESSURE TESTED AND CHLORINATED TESTED.

5.) INSTALLATION AND TESTING OF THE WATER MAIN SHALL BE PERFORMED BY THE CONTRACTOR AND COORDINATED WITH THE TOWN OF WESTFORD WATER DEPARTMENT FOR INSPECTIONS AND REQUIRED CERTIFICATIONS.

TYPICAL CROSS SECTION

NOT TO SCALE

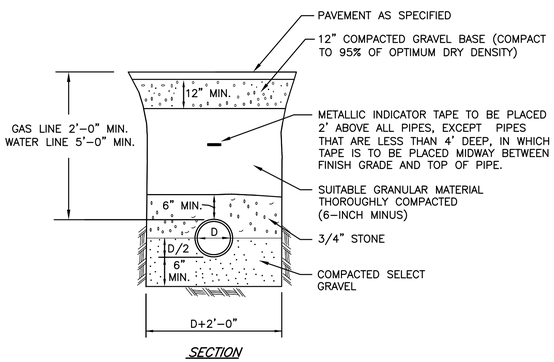

SECTION

TYPICAL UTILITY TRENCH

NOT TO SCALE

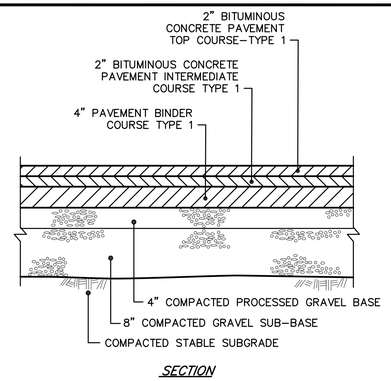

SECTION

TYPICAL FULL DEPTH PAVEMENT DETAIL

NOT TO SCALE

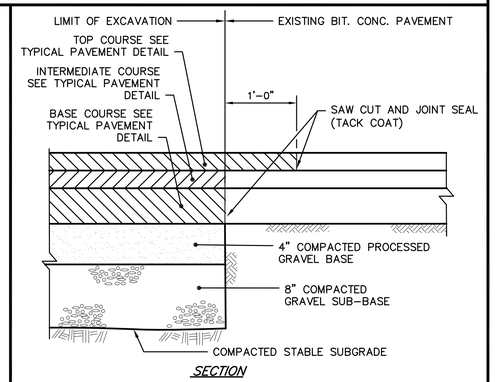

SECTION

PAVEMENT MATCHING AND OVERLAY DETAIL

NOT TO SCALE

DATE	REVISION	BY

PREPARED FOR:
TOWN OF WESTFORD
ENGINEERING DEPARTMENT
28 NORTH STREET
WESTFORD, MA 01886

DESIGN	DRAFT	CHECK
ART	ART	CML

SECTIONS AND DETAILS
KEYES BROOK CULVERT
GROTON ROAD (ROUTE 40)
WESTFORD, MA

APRIL 6, 2016

SCALE: AS NOTED

LandTech Consultants
Engineering/Design/Surveying/Permitting
515 Groton Road – Westford, MA 01886
Ph: (978) 692–6100 – landtechinc.com

Copyright © 2015

REPRODUCTION OF THIS PLAN IN WHOLE OR PART IS PROHIBITED WITHOUT THE WRITTEN CONSENT OF THE DESIGN ENGINEER AND/OR FIRM.

JOB NO.	DWG. NO.	SHEET
12–101	9514	DS

NOTES:

1. ALL TEMPORARY TRAFFIC CONTROL WORK SHALL CONFORM TO THE LATEST EDITION OF THE "MANUAL ON UNIFORM TRAFFIC CONTROL DEVICES" (MUTCD) AND ALL REVISIONS.
2. ALL SIGN LEGENDS, BORDERS AND MOUNTING SHALL BE IN ACCORDANCE WITH THE MUTCD.
3. TEMPORARY CONSTRUCTION SIGNING AND ALL OTHER TRAFFIC CONTROL DEVICES SHALL BE IN PLACE PRIOR TO THE START OF ANY WORK.
4. TEMPORARY CONSTRUCTION SIGNING, BARRICADES AND ALL OTHER NECESSARY WORK ZONE TRAFFIC CONTROL DEVICES SHALL BE REMOVED FROM THE HIGHWAY OR COVERED WHEN THEY ARE NOT REQUIRED FOR CONTROL OF TRAFFIC.
5. SIGNS AND SIGN SUPPORTS LOCATED ON OR NEAR THE TRAVELED WAY, AND REFLECTORIZED PLASTIC DRUMS WITH LIGHTING DEVICES MOUNTED ON THEM, MUST PASS THE CRITERIA SET FORTH IN NCHRP REPORT 350, "RECOMMENDED PROCEDURES FOR THE SAFETY PERFORMANCE EVALUATION OF HIGHWAY FEATURES."
6. NEIGHBORING RESIDENTS AND BUSINESSES SHALL HAVE ACCESS TO AND EGRESS FROM THEIR PROPERTIES DURING CONSTRUCTION. THE CONTRACTOR IS RESPONSIBLE FOR SECURING AN AREA FOR MATERIAL STORAGE AND EQUIPMENT. CONTRACTORS SHALL NOTIFY EACH ABUTTER AT LEAST 24 HOURS IN ADVANCE OF THE START OF ANY WORK THAT WILL REQUIRE THE TEMPORARY CLOSURE OF ACCESS, SUCH AS CONDUIT INSTALLATION, EXISTING PAVEMENT EXCAVATION, TEMPORARY DRIVEWAY PAVEMENT PLACEMENT AND SIMILAR OPERATIONS.
7. THE FIRST FIVE PLASTIC DRUMS OF A TAPER SHALL BE MOUNTED WITH TYPE A LIGHTS.
8. THE ADVISORY SPEED LIMIT, IF REQUIRED, SHALL BE DETERMINED BY THE ENGINEER.
9. DISTANCES ARE A GUIDE AND MAY BE ADJUSTED IN THE FIELD BY THE TOWN ENGINEER.
10. MAXIMUM SPACING OF TRAFFIC DEVICES IN A TAPER (DRUMS OR CONES) IS EQUAL IN FEET TO THE SPEED LIMIT IN MPH.
11. MINIMUM LANE WIDTH IS TO BE 11 FEET UNLESS OTHERWISE SHOWN. MINIMUM LANE WIDTH TO BE MEASURED FROM THE EDGE OF DRUMS OR MEDIAN BARRIER.
12. ALL SIGNS SHALL BE MOUNTED ON THEIR OWN STANDARD SIGN SUPPORTS.
13. NON–ESSENTIAL TRAFFIC CONTROL DEVICES SHALL BE COVERED OR REMOVED DURING NON–WORKING HOURS. OR WHEN THE SIGNS WOULD NOT BE APPLICABLE.
14. FINAL LOCATION OF EACH SIGN SHALL BE DETERMINED IN THE FIELD AT THE TIME OF CONSTRUCTION.

TRAFFIC SIGN SUMMARY

IDENTIFICATION NUMBER	SIZE OF SIGN (in)			TEXT DIMENSIONS (in)			NUMBER OF SIGNS REQUIRED	COLOR			UNIT AREA (SF)	TOTAL AREA (SF)
	WIDTH	HEIGHT	LEGEND	LETTER HEIGHT	VERTICAL SPACING	ARROW RTE. MKR		BACK-GROUND	LEGEND	BORDER		
W20-4	36	36	ONE LANE ROAD AHEAD	SEE 2009 MUTCD FOR DIMENSIONS			2	FL. ORANGE	BLACK	BLACK	9.00	18.00
W20-7b	36	36	POLICE OFFICER AHEAD	MASSDOT STANDARD SIGN			2	FL. ORANGE	BLACK	BLACK	9.00	18.00
G20-2	36	18	END ROAD WORK	MASSDOT STANDARD SIGN			2	FL. ORANGE	BLACK	BLACK	4.50	9

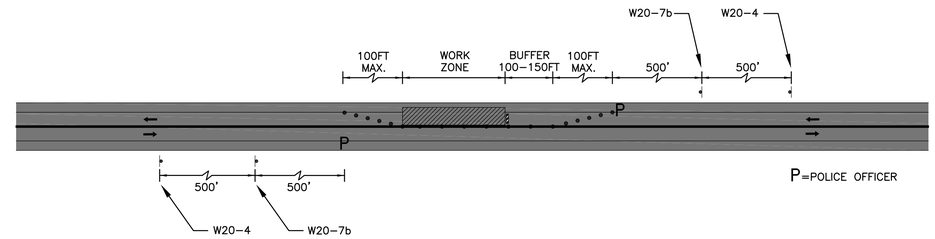

LANE AND SHOULDER CLOSURE

N.T.S.

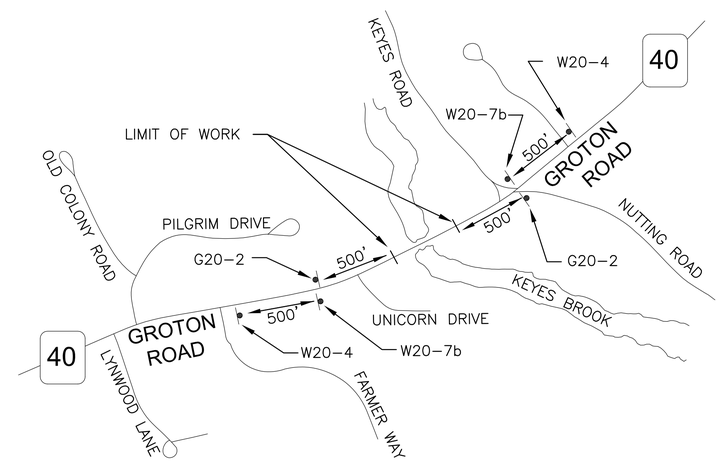

SEE NOTE 14 (THIS SHEET).

ADVANCE WARNING SCHEMATIC FOR LANE AND SHOULDER CLOSING

N.T.S.

NOTE:

1. THE CONTRACTOR WILL ONLY BE RESPONSIBLE FOR TEMPORARY TRAFFIC CONTROL WHEN THE ROAD IS OPEN OR REDUCED TO ONE LANE.
2. THE TOWN WILL BE RESPONSIBLE FOR THE DETOUR, DETOUR ROUTE, DETOUR SIGNAGE, MESSAGE BOARDS, ETC. WHEN ROUTE 40 IS CLOSED TO THROUGH TRAFFIC.

LEGEND:

- REFLECTORIZED PLASTIC DRUM
- WORK ZONE
- DIRECTION OF TRAFFIC
- SIGN

DATE	REVISION	BY

COMMONWEALTH OF MASSACHUSETTS MATTHEW A. WATERMAN No. 47866 REGISTERED PROFESSIONAL ENGINEER

PREPARED FOR:
TOWN OF WESTFORD
ENGINEERING DEPARTMENT
28 NORTH STREET
WESTFORD, MA 01886

DESIGN --- DRAFT --- CHECK ---

TEMPORARY TRAFFIC CONTROL PLAN
KEYES BROOK CULVERT
GROTON ROAD (ROUTE 40)
WESTFORD, MA

APRIL 6, 2016

SCALE: N.T.S.

LandTech Consultants
Engineering/Design/Surveying/Permitting
515 Groton Road, – Westford, MA 01886
Ph: (978) 692–6100 – landtechinc.com

COPYRIGHT © 2012
REPRODUCTION OF THIS PLAN IN WHOLE OR PART IS PROHIBITED WITHOUT THE WRITTEN CONSENT OF THE DESIGN ENGINEER AND/OR FIRM.

JOB NO. 12–101 | DWG. NO. 9514 | SHEET TTCP

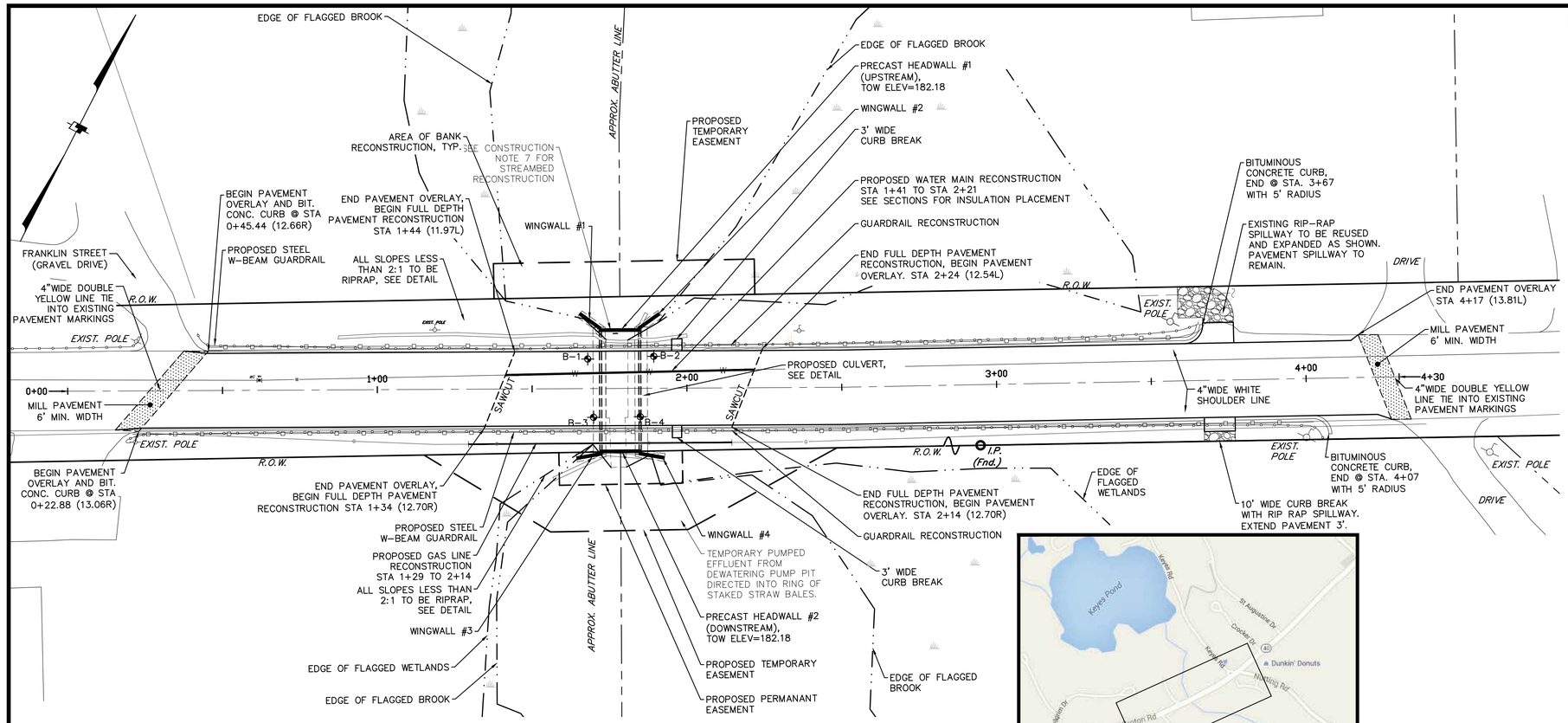

KEY PLAN
SCALE: 1" = 20'

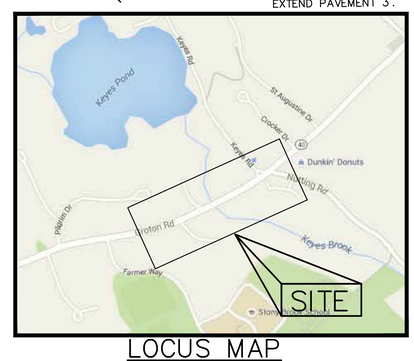

LOCUS MAP
SCALE: 1"=800'

DESIGN

IN ACCORDANCE WITH THE 2010 AMERICAN ASSOCIATION OF STATE HIGHWAY AND TRANSPORTATION OFFICIALS (AASHTO LRFD BRIDGE DESIGN SPECIFICATIONS, 5TH EDITION, FOR HL-93 LOADING

EXISTING CONDITIONS

ALL DIMENSIONS AND DETAILS SHOWN FOR EXISTING STRUCTURE ARE NOT GUARANTEED. THE CONTRACTOR SHALL DETERMINE AND ESTABLISH ALL DIMENSIONS AND DETAILS NECESSARY FOR COMPLETION OF ALL WORK BY FIELD MEASUREMENTS AND SURVEY. THE CONTRACTOR SHALL BE RESPONSIBLE FOR THE ADEQUACY AND ACCURACY HEREOF AND SHALL NOT ORDER ANY MATERIAL OR COMMENCE ANY FABRICATION UNTIL HE/SHE HAS MADE THE REQUIRED MEASUREMENTS ON THE ACTUAL STRUCTURE AND THE EXTENT OF THE PROPOSED WORK HAS BEEN APPROVED BY THE ENGINEER.

EXISTING BRIDGE PLANS AND SURVEY

PLANS FOR EXISTING BRIDGE ARE NOT AVAILABLE.

MASSDOT BENCHMARK

PK-5 NAIL SET:
N: 666636.03 E: 3047268.90 EL: 213.57
PK-6 NAIL SET:
N: 666839.64 E: 3047412.17 EL: 192.65

FOUNDATIONS, UNSUITABLE MATERIAL AND UTILITIES

FOUNDATIONS MAY BE ALTERED, IF NECESSARY, TO SUIT CONDITLONS ENCOUNTERED DURING CONSTRUCTION, WITH THE APPROVAL OF THE ENGINEER. ALL UNSUITABLE MATERIAL SHALL BE REMOVED WITHIN THE LIMITS OF THE FOUNDATIONS OF THE STRUCTURE AS DIRECTED BY THE ENGTNEER. THE CONTRACTOR SHALL LOCATE AND PROTECT FROM DAMAGE ALL EXISTING UTILITIES.

REINFORCEMENT

REINFORCING STEEL SHALL CONFORM TO THE REQUIREMENTS OF AASHTO M31, GRADE 60. UNLESS OTHERWISE NOTED ON THE CONSTRUCTION DRAWINGS, ALL BARS SHALL BE AS FOLLOWS:

BAR LIST – TYPE C

MARK	QTY.	SIZE	A	TYPE	LENGTH	FINISH
B1	4	#6	3'-0"	3	–	EPOXY
B2	2	#5	–	STR.	3'-2"	BLACK
B3	4	#5	–	STR.	4'-3"	BLACK
B4	7	#5	–	STR.	2'-2"	BLACK
B5	2	#5	3'-8"	2	–	BLACK
B6	1	#5	3'-2"	1	–	BLACK
B7	1	#5	4'-2"	1	–	BLACK
B8	1	#5	4'-5"	1	–	BLACK
B9	1	#5	4'-8"	1	–	BLACK

NOTE: "STR." DENOTES STRAIGHT BAR. STANDARD CLEARANCE = 2".

WHEREVER THE REINFORCING IS CUT FOR THE PLACEMENT OF LIFT HOLES OR OTHER BLOCKOUTS, REINFORCING BARS OR WIRES OF EQUIVALENT CROSS-SECTIONAL AREA SHALL BE PLACED SYMMETRICALLY AROUND THE HOLE. AT LEAST ONE BAR MUST BE ON EACH SIDE OF THE HOLE, AND THE DEVELOPMENT LENGTH OF THE BAR MUST BE ACHIEVED ON EITHER SIDE OF THE CUT.

CONCRETE MIX

HEADWALL		ARCH UNIT		
CONCRETE	REINF. STEEL	CONCRETE	REINF. STEEL	WWF
28 DAYS 5,000 PSI	60,000 PSI UNCOATED	28 DAYS 4,000 PSI	60,000 PSI UNCOATED	65,000 PSI UNCOATED

INDEX

1. KEY PLAN, LOCUS, PROFILE, GENERAL NOTES AND INDEX
2. BORING LOGS
3. BRIDGE PLAN AND ELEVATION VIEWS
4. CROSS SECTION AND FOOTING DETAILS

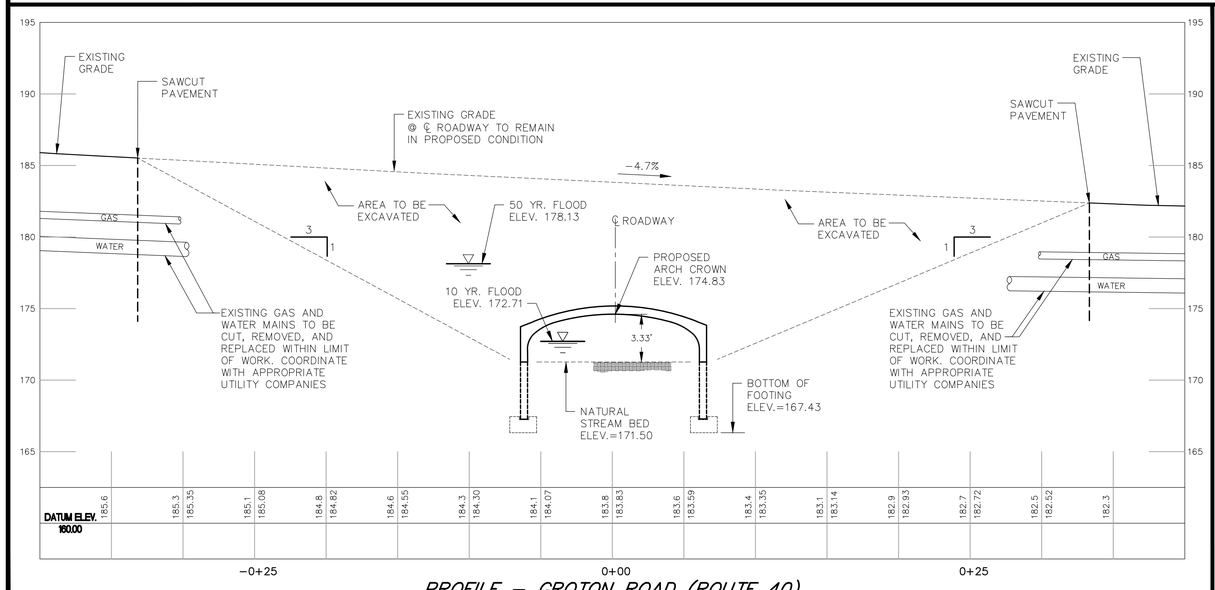

PROFILE – GROTON ROAD (ROUTE 40)
SCALE: 1" = 5'

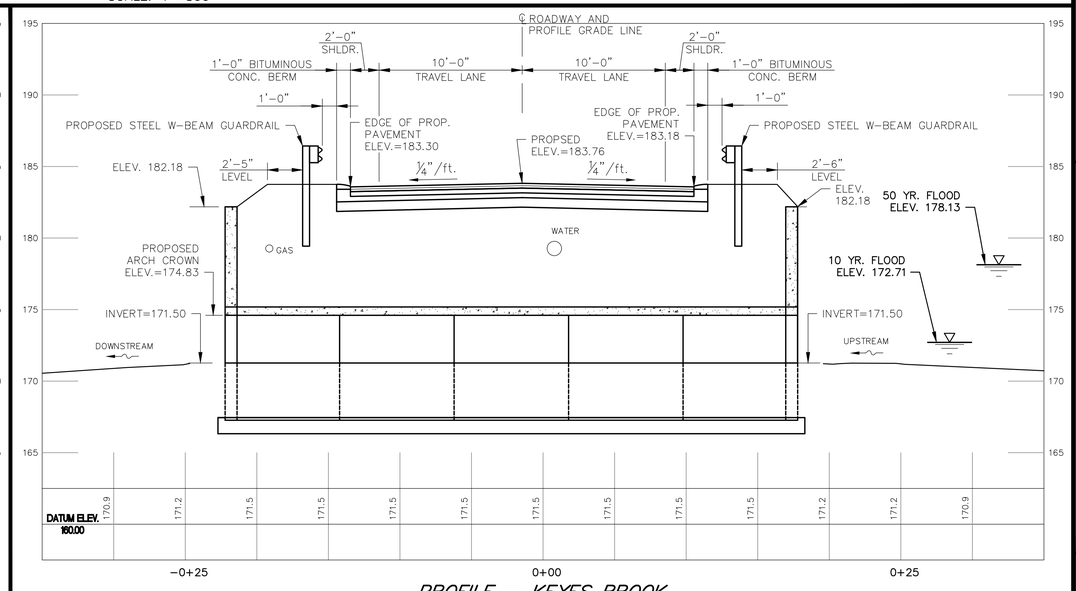

PROFILE – KEYES BROOK
SCALE: 1" = 5'

DATE	REVISION	BY

PREPARED FOR:
TOWN OF WESTFORD
28 NORTH STREET
WESTFORD, MA 01886
ENGINEERING DEPARTMENT

DESIGN ART | DRAFT ART | CHECK CML

KEY PLAN, LOCUS, PROFILE, GENERAL NOTES AND INDEX
KEYES BROOK CULVERT
GROTON ROAD (ROUTE 40)
WESTFORD, MA

SCALE: AS SHOWN
NOVEMBER 14, 2012

LandTech Consultants
Engineering/Design/Surveying/Permitting
515 Groton Road, - Westford, MA 01886
Ph: (978) 692-6100 - landtechinc.com

COPYRIGHT © 2012

JOB NO. 12-101 | DWG. NO. 9514 | SHEET BR-1

TEST BORING LOG

MILLER ENGINEERING & TESTING, INC.
100 Sheffield Road - Manchester, NH 03103
Ph. (603) 668-6016 - Fax: (603) 668-8641

Project: RTE. 40 CULVERT REPLACEMENT
WESTFORD, MA
Project No: 12.148.NH
Date Start: 05-29-12
Date End: 05-29-12
Sheet 1 of 1
Boring No: B-1
Location: See Plan
Approx. Surface Elev: 183

GROUNDWATER OBSERVATIONS					
	CASING	SAMPLER	Date	Depth	Casing At	Stabilization Period
Type	HSA	SS	05-29-12	+/- 12.0'	24.0'	Upon Completion
Size	2-1/4" ID	1-3/8" ID				
Hammer		140 lbs.				
Fall		30"				

Depth/ Elev.	Cas bl/ft	Sample No.	Depth Range	Pen.	Rec.	0-6"	6-12"	12-18"	18-24"	Strata Change	Sample Description	Notes
0 / 183		PVMNT	0.0-0.8	10							PVMNT: 10" Bituminous pavement	
		S-1	1.0-2.0	12	10	11	9				S-1: Brown fine to coarse sand, some gravel, little asphalt, trace silt (FILL)	
		S-2	2.0-4.0	24	10	7	6	5	5		S-2: Brown fine to medium sand, little gravel, trace silt (FILL)	
5 / 178		S-3	4.0-6.0	24	10	4	5	3	4		S-3: Brown fine to medium sand, little gravel, trace silt (FILL)	
		S-4	6.0-8.0	24	8	3	4	3	6		S-4: Brown fine to medium sand, little gravel, trace silt (FILL)	
10 / 173		S-5	9.0-11.0	24	7	5	7	6	4		S-5: Brown fine to coarse sand, some gravel, trace silt (FILL) (MOIST)	
		S-6	11.0-13.0	24	0	3	4	5	6		S-6: No Recovery; Rock in SS Tip	
		S-7	14.0-15.0	12	10	1	9				S-7: Brown fine to coarse sand and gravel, trace silt (WET)	
15 / 168		S-7A	15.0-16.0	12	12			18	18		S-7A: Gray fine to coarse sand and gravel, trace silt (WET)	
		S-8	19.0-20.0	12	12	17	12				S-8: Gray fine to coarse sand and gravel, trace silt (WET)	
20 / 163		S-8A	20.0-21.0	12	12			8	12		S-8A: Olive-brown fine sand and silt (WET)	
25 / 158		S-9	24.0-26.0	24	20	6	6	5	9		S-9: Olive-brown fine sand and silt (WET)	
											BORING TERMINATED AT 26 ft	
30 / 153												

Driller: R. Marcoux
Helper: D. Hurlbut
Inspector: T. Strike

COHESIVE CONSISTENCY (Blows/Foot): 0-2 VERY SOFT; 2-4 SOFT; 4-8 MEDIUM STIFF; 8-15 STIFF; 15-30 HARD
COHESIONLESS (Blows/Foot): 0-4 VERY LOOSE; 4-10 LOOSE; 10-30 MEDIUM DENSE; 30-50 DENSE; 50+ VERY DENSE
PROPORTIONS USED: TRACE: 0-10%; LITTLE: 10-20%; SOME: 20-35%; AND: 35-50%

NOTES:

REMARKS: THE STRATIFICATION LINES REPRESENT THE APPROXIMATE BOUNDARY BETWEEN SOIL TYPES. TRANSITION MAY BE GRADUAL. WATER LEVEL READINGS HAVE BEEN MADE IN THE DRILL HOLES AT TIMES AND UNDER CONDITIONS STATED ON THE BORING LOGS. FLUCTUATIONS IN THE LEVEL OF THE GROUNDWATER MAY OCCUR DUE TO OTHER FACTORS THAN THOSE PRESENT AT THE TIME MEASUREMENTS WERE MADE.

TEST BORING LOG

MILLER ENGINEERING & TESTING, INC.
100 Sheffield Road - Manchester, NH 03103
Ph. (603) 668-6016 - Fax: (603) 668-8641

Project: RTE. 40 CULVERT REPLACEMENT
WESTFORD, MA
Project No: 12.148.NH
Date Start: 05-29-12
Date End: 05-29-12
Sheet 1 of 1
Boring No: B-2
Location: See Plan
Approx. Surface Elev: 183

GROUNDWATER OBSERVATIONS					
	CASING	SAMPLER	Date	Depth	Casing At	Stabilization Period
Type	HSA	SS	05-29-12	+/- 10.0'	19.0'	Upon Completion
Size	2-1/4" ID	1-3/8" ID				
Hammer		140 lbs.				
Fall		30"				

Depth/ Elev.	Cas bl/ft	Sample No.	Depth Range	Pen.	Rec.	0-6"	6-12"	12-18"	18-24"	Strata Change	Sample Description	Notes
0 / 183		PVMNT	0.0-0.8	10							PVMNT: 10" Bituminous pavement	
		S-1	1.0-1.5	6	4	22					S-1: Brown fine to coarse sand, some gravel, trace silt (FILL)	
		S-1A	1.5-2.0	6	6		9				S-1A: Bituminous pavement	
		S-2	2.0-4.0	24	15	8	6	5	3		S-2: Brown fine to coarse sand, some gravel, trace silt (FILL)	
5 / 178		S-3	4.0-6.0	24	14	3	3	3	3		S-3: Brown fine to medium sand, little gravel, trace silt (FILL)	
		S-4	6.0-8.0	24	7	2	2	3	4		S-4: Brown fine to medium sand, little gravel, trace silt (FILL)	
10 / 173		S-5	9.0-11.0	24	8	2	4	4	4		S-5: Brown fine to coarse sand, little gravel, trace silt (WET)	
		S-6	11.0-13.0	24	7	5	4	2	4		S-6: Brown fine to coarse sand, some gravel, trace silt (WET)	
15 / 168		S-7	14.0-16.0	24	17	12	21	17	28		S-7: Gray fine to coarse sand and gravel, trace silt (WET)	
20 / 163		S-8	19.0-21.0	24	15	16	19	29	20		S-8: Gray fine to coarse sand and gravel, trace silt (WET)	
											BORING TERMINATED AT 21 ft	
25 / 158												
30 / 153												

Driller: R. Marcoux
Helper: D. Hurlbut
Inspector: T. Strike

COHESIVE CONSISTENCY (Blows/Foot): 0-2 VERY SOFT; 2-4 SOFT; 4-8 MEDIUM STIFF; 8-15 STIFF; 15-30 HARD
COHESIONLESS (Blows/Foot): 0-4 VERY LOOSE; 4-10 LOOSE; 10-30 MEDIUM DENSE; 30-50 DENSE; 50+ VERY DENSE
PROPORTIONS USED: TRACE: 0-10%; LITTLE: 10-20%; SOME: 20-35%; AND: 35-50%

NOTES:

REMARKS: THE STRATIFICATION LINES REPRESENT THE APPROXIMATE BOUNDARY BETWEEN SOIL TYPES. TRANSITION MAY BE GRADUAL. WATER LEVEL READINGS HAVE BEEN MADE IN THE DRILL HOLES AT TIMES AND UNDER CONDITIONS STATED ON THE BORING LOGS. FLUCTUATIONS IN THE LEVEL OF THE GROUNDWATER MAY OCCUR DUE TO OTHER FACTORS THAN THOSE PRESENT AT THE TIME MEASUREMENTS WERE MADE.

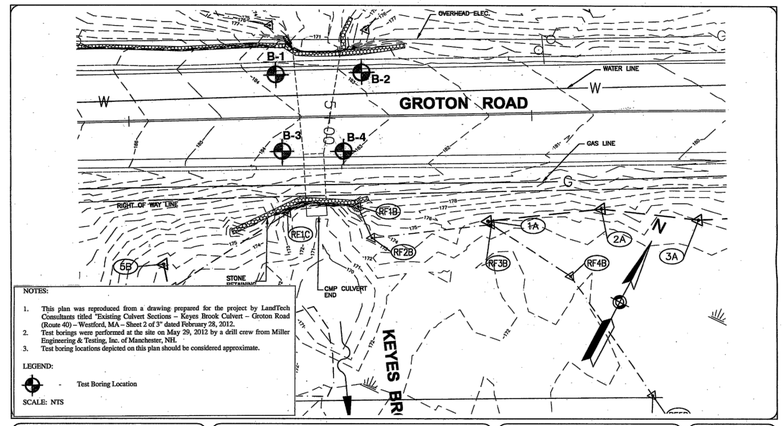

NOTES:
1. This plan was reproduced from a drawing prepared for the project by LandTech Consultants titled "Existing Culvert Sections – Keyes Brook Culvert – Groton Road (Route 40) – Westford, MA – Sheet 2 of 3" dated February 28, 2012.
2. Test borings were performed at the site on May 29, 2012 by a drill crew from Miller Engineering & Testing, Inc. of Manchester, NH.
3. Test boring locations depicted on this plan should be considered approximate.

LEGEND:
- Test Boring Location

SCALE: NTS

MILLER ENGINEERING & TESTING, INC.
100 SHEFFIELD ROAD - PO BOX 4791
MANCHESTER, NEW HAMPSHIRE 03108
TEL (603) 668-6016 FAX (603) 668-8641
EMAIL ENGINE@MILLERENGANDTESTING.COM

PROJECT: ROUTE 40 CULVERT REPLACEMENT
WESTFORD, MA
PROJECT NO.: 12.148.NH
DATE: JUNE 2012

SUBSURFACE EXPLORATION LOCATION PLAN

FIGURE NO. 1

BORING NOTES

1. LOCATION OF BORINGS SHOWN ON THE KEY PLAN ON THIS SHEET THUS: ✥ B–1.
2. BORING ARE TAKEN FOR THE PURPOSE OF DESIGN AND SHOW CONDITIONS AT BORING POINTS ONLY, BUT DO NOT NECESSARILY SHOW THE NATURE OF MATERIALS TO BE ENCOUNTERED DURING CONSTRUCTION.
3. WATER LEVELS SHOWN ON THE BORING LOGS WERE OBSERVED AT THE TIME OF TAKING BORINGS DO NOT NECESARRILY SHOW THE TRUE GROUND WATER LEVEL.
4. FIGURES IN COLUMS INDICATE NUMBER OF BLOWS REQUIRED TO DRIVE A 1⅜" LT SPOON SAMPLER 6" USING A 140 POUND WEIGHT FREE–FALLING 30".
5. ALL BORINGS WERE MADE IN MAY 2012.
6. ALL BORING WERE MADE BY MILLER ENGINEERING AND TESTING, INC. MANCHESTER, NH.
7. THE NORTH AMERICA VERTICAL DATUM (NAVD) OF 1988 IS USED THROUGHOUT.

TEST BORING LOG

MILLER ENGINEERING & TESTING, INC.
100 Sheffield Road - Manchester, NH 03103
Ph. (603) 668-6016 - Fax: (603) 668-8641

Project: RTE. 40 CULVERT REPLACEMENT
WESTFORD, MA
Project No: 12.148.NH
Date Start: 05-29-12
Date End: 05-29-12
Sheet 1 of 1
Boring No: B-3
Location: See Plan
Approx. Surface Elev: 183

GROUNDWATER OBSERVATIONS					
	CASING	SAMPLER	Date	Depth	Casing At	Stabilization Period
Type	HSA	SS	05-29-12	+/- 10.0'	19.0'	Upon Completion
Size	2-1/4" ID	1-3/8" ID				
Hammer		140 lbs.				
Fall		30"				

Depth/ Elev.	Cas bl/ft	Sample No.	Depth Range	Pen.	Rec.	0-6"	6-12"	12-18"	18-24"	Strata Change	Sample Description	Notes
0 / 183		PVMNT	0.0-1.3	15							PVMNT: 15" Bituminous pavement	
		S-1	1.5-2.0	6	6	10					S-1: Brown fine to coarse sand, some gravel, trace silt (FILL)	
		S-2	2.0-4.0	24	12	7	6	2	4		S-2: Brown fine to medium sand, some gravel, little silt (FILL)	
5 / 178		S-3	4.0-5.1	13	6	4	37	50/1"			S-3: Dark brown fine to medium sand, little gravel, little silt, trace asphalt (FILL)	(2)
											3 Trials	(3)
											Auger Refusal between 4.0 and 7.0'	(1)
											BORING TERMINATED AT 7 ft	
10 / 173												
15 / 168												
20 / 163												
25 / 158												
30 / 153												

Driller: R. Marcoux
Helper: D. Hurlbut
Inspector: T. Strike

COHESIVE CONSISTENCY (Blows/Foot): 0-2 VERY SOFT; 2-4 SOFT; 4-8 MEDIUM STIFF; 8-15 STIFF; 15-30 HARD
COHESIONLESS (Blows/Foot): 0-4 VERY LOOSE; 4-10 LOOSE; 10-30 MEDIUM DENSE; 30-50 DENSE; 50+ VERY DENSE
PROPORTIONS USED: TRACE: 0-10%; LITTLE: 10-20%; SOME: 20-35%; AND: 35-50%

NOTES:
(1) Auger Refusal at 7.0'
(2) Auger Refusal at 4.0'
(3) Auger Refusal at 5.0'

REMARKS: THE STRATIFICATION LINES REPRESENT THE APPROXIMATE BOUNDARY BETWEEN SOIL TYPES. TRANSITION MAY BE GRADUAL. WATER LEVEL READINGS HAVE BEEN MADE IN THE DRILL HOLES AT TIMES AND UNDER CONDITIONS STATED ON THE BORING LOGS. FLUCTUATIONS IN THE LEVEL OF THE GROUNDWATER MAY OCCUR DUE TO OTHER FACTORS THAN THOSE PRESENT AT THE TIME MEASUREMENTS WERE MADE.

TEST BORING LOG

MILLER ENGINEERING & TESTING, INC.
100 Sheffield Road - Manchester, NH 03103
Ph. (603) 668-6016 - Fax: (603) 668-8641

Project: RTE. 40 CULVERT REPLACEMENT
WESTFORD, MA
Project No: 12.148.NH
Date Start: 05-29-12
Date End: 05-29-12
Sheet 1 of 1
Boring No: B-4
Location: See Plan
Approx. Surface Elev: 183

GROUNDWATER OBSERVATIONS					
	CASING	SAMPLER	Date	Depth	Casing At	Stabilization Period
Type	HSA	SS	05-29-12	+/- 10.0'	19.0'	Upon Completion
Size	2-1/4" ID	1-3/8" ID				
Hammer		140 lbs.				
Fall		30"				

Depth/ Elev.	Cas bl/ft	Sample No.	Depth Range	Pen.	Rec.	0-6"	6-12"	12-18"	18-24"	Strata Change	Sample Description	Notes
0 / 183		PVMNT	0.0-0.8	10							PVMNT: 10" Bituminous pavement	(2)
		S-1	1.0-2.0	12	8	14	7				S-1: Brown fine to coarse sand and gravel, little asphlat, trace silt (FILL)	
		S-2	2.0-4.0	24	4	6	1	1/12"			S-2: Brown fine to medium sand, some gravel, trace silt (FILL)	
5 / 178		S-3	4.0-4.3	4	0	1/24"					S-3: No recovery	
		S-4	6.0-8.0	24	2	1/12"		2	10		S-4: Brown fine to coarse sand and gravel, trace silt (FILL)	
10 / 173		S-5	9.0-11.0	24	15	1	3	3	5		S-5: Brown fine to coarse sand, little gravel, trace silt (WET)	(1)
15 / 168		S-6	14.0-15.5	18	10	11	15	19			S-6: Gray fine to coarse sand, some gravel, little silt (WET)	
											Terminated at 15.5' due to auger "jammed" in borehole.	
											BORING TERMINATED AT 15.5 ft	
20 / 163												
25 / 158												
30 / 153												

Driller: R. Marcoux
Helper: D. Hurlbut
Inspector: T. Strike

COHESIVE CONSISTENCY (Blows/Foot): 0-2 VERY SOFT; 2-4 SOFT; 4-8 MEDIUM STIFF; 8-15 STIFF; 15-30 HARD
COHESIONLESS (Blows/Foot): 0-4 VERY LOOSE; 4-10 LOOSE; 10-30 MEDIUM DENSE; 30-50 DENSE; 50+ VERY DENSE
PROPORTIONS USED: TRACE: 0-10%; LITTLE: 10-20%; SOME: 20-35%; AND: 35-50%

NOTES:
(1) Auger grinding from approximately 9.0-10.75', auger refusal at 10.75'
(2) Re-locate test boring approximately 5.0' east of plan

REMARKS: THE STRATIFICATION LINES REPRESENT THE APPROXIMATE BOUNDARY BETWEEN SOIL TYPES. TRANSITION MAY BE GRADUAL. WATER LEVEL READINGS HAVE BEEN MADE IN THE DRILL HOLES AT TIMES AND UNDER CONDITIONS STATED ON THE BORING LOGS. FLUCTUATIONS IN THE LEVEL OF THE GROUNDWATER MAY OCCUR DUE TO OTHER FACTORS THAN THOSE PRESENT AT THE TIME MEASUREMENTS WERE MADE.

DATE	REVISION	BY

PREPARED FOR:
TOWN OF WESTFORD
ENGINEERING DEPARTMENT
28 NORTH STREET
WESTFORD, MA 01886

DESIGN ART | DRAFT ART | CHECK CML

BORING LOGS
KEYES BROOK CULVERT
GROTON ROAD (ROUTE 40)
WESTFORD, MA

NOVEMBER 14, 2012

SCALE: NOT TO SCALE

LandTech Consultants
Engineering/Design/Surveying/Permitting
515 Groton Road, – Westford, MA 01886
Ph: (978) 692–6100 – landtechinc.com

COPYRIGHT © 2012
REPRODUCTION OF THIS PLAN IN WHOLE OR PART IS PROHIBITED WITHOUT THE WRITTEN CONSENT OF THE DESIGN ENGINEER AND/OR FIRM.

JOB NO. 12–101 | DWG. NO. 9514 | SHEET BR–2

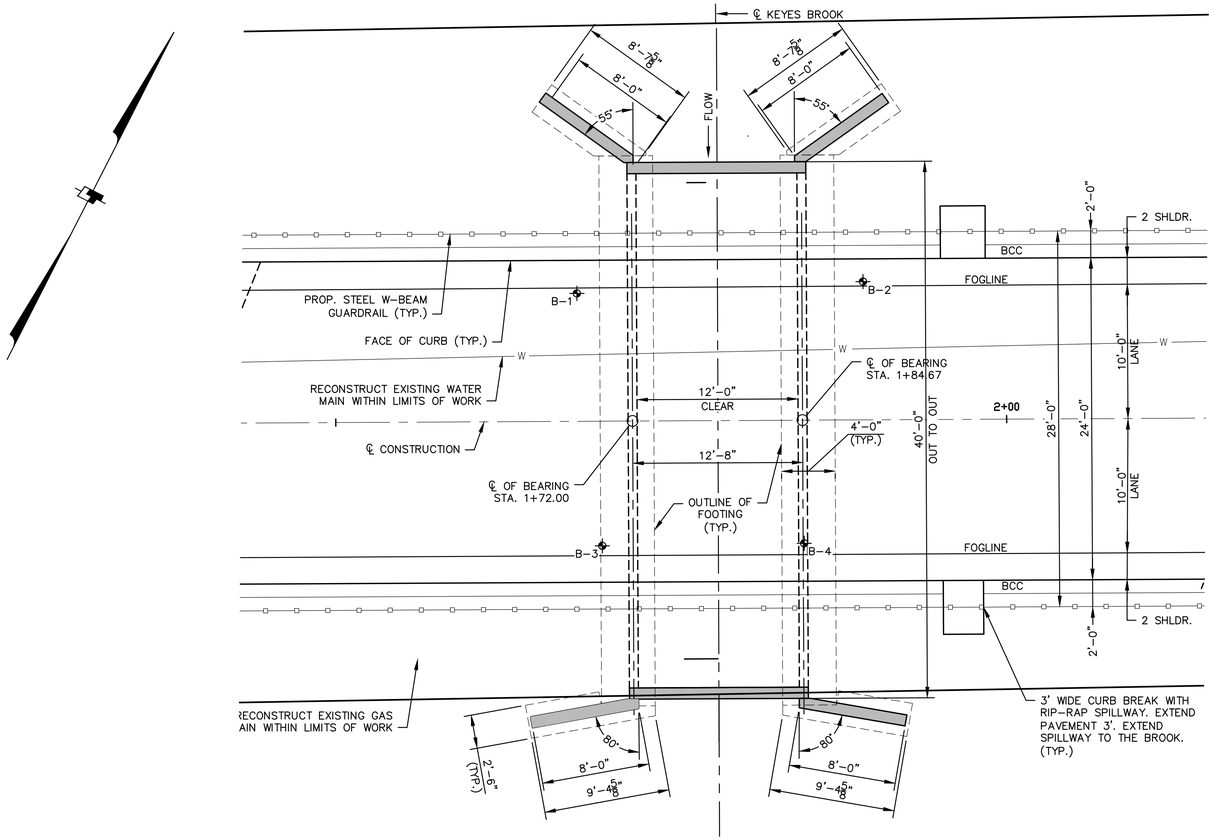

PLAN

SCALE: 3/16" = 1'-0"

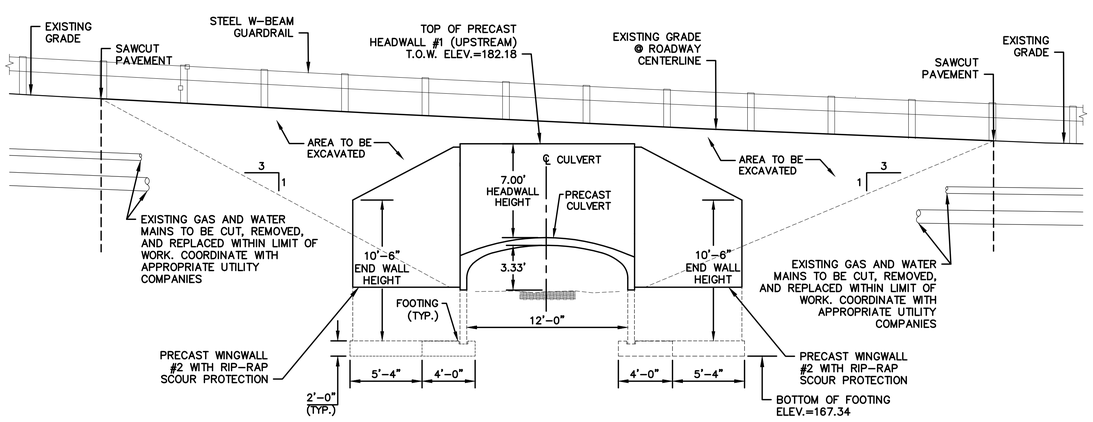

ELEVATION @ DOWNSTREAM FACE LOOKING UPSTREAM

SCALE: 3/16" = 1'-0"

DATE	REVISION	BY

PREPARED FOR:
TOWN OF WESTFORD
ENGINEERING DEPARTMENT
28 NORTH STREET
WESTFORD, MA 01886

DESIGN	DRAFT	CHECK
ART	ART	CML

BRIDGE PLAN AND ELEVATION VIEWS
KEYES BROOK CULVERT
GROTON ROAD (ROUTE 40)
WESTFORD, MA

NOVEMBER 14, 2012

SCALE: AS SHOWN

LandTech Consultants
Engineering/Design/Surveying/Permitting
515 Groton Road, – Westford, MA 01886
Ph: (978) 692-6100 – landtechinc.com

COPYRIGHT © 2012

REPRODUCTION OF THIS PLAN IN WHOLE OR PART IS PROHIBITED WITHOUT THE WRITTEN CONSENT OF THE DESIGN ENGINEER AND/OR FIRM.

JOB NO.	DWG. NO.	SHEET
12-101	9514	BR-3

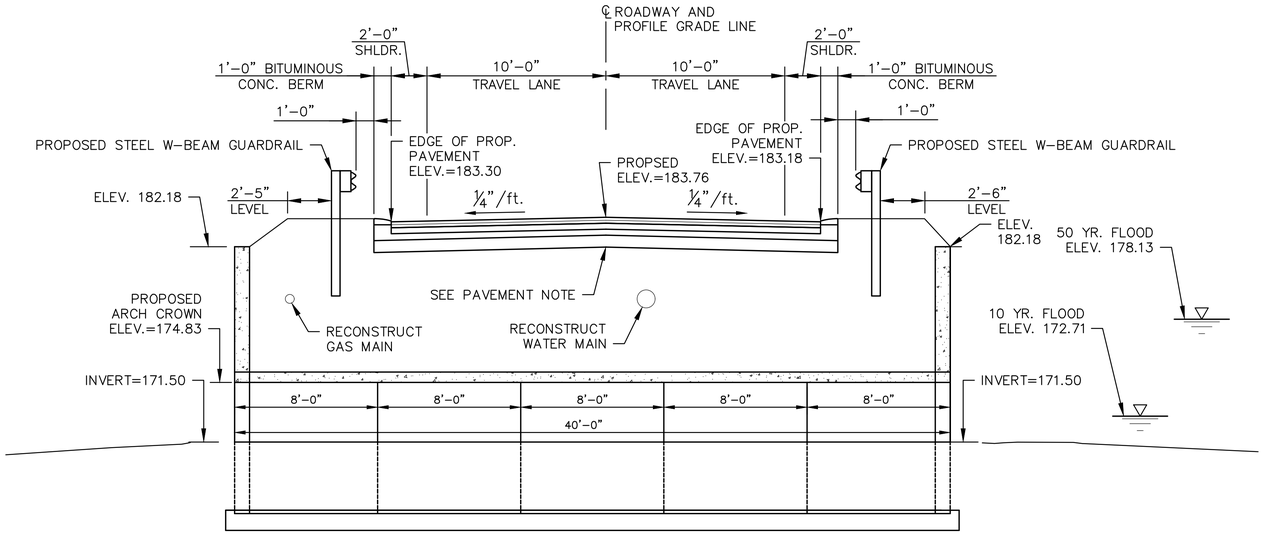

CROSS SECTION AT ARCH CROWN

SCALE: 1/4" = 1'-0"

PAVEMENT NOTE:

FULL DEPTH PAVEMENT

SURFACE: 2" BITUMINOUS CONCRETE PAVEMENT TOP COURSE–TYPE 1 OVER
2" BITUMINOUS CONCRETE PAVEMENT INTERMEDIATE COURSE–TYPE 1
4" BITUMINOUS CONCRETE PAVEMENT BASE COURSE–TYPE 1

BASE: 4" COMPACTED PROCESSED GRAVEL BASE

SUBBASE: 8" COMPACTED GRAVEL SUB–BASE

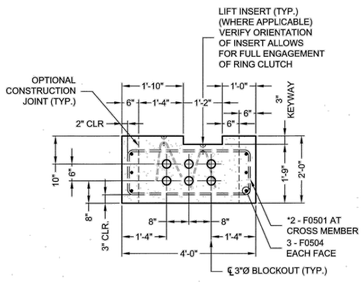

SECTION 13

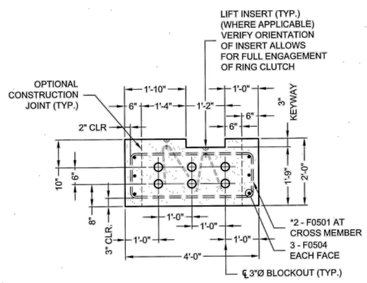

SECTION 14

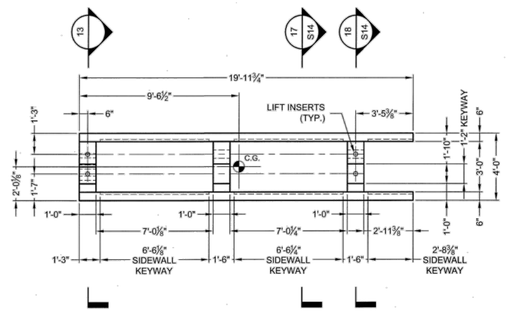

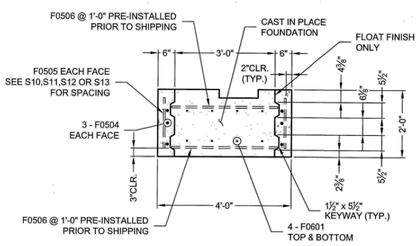

SECTION 17
AT BAY
S10,S11,S12,S13

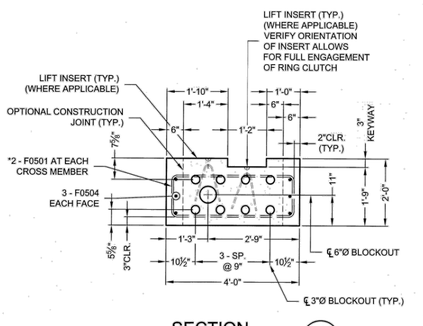

SECTION 18
AT CROSS MEMBER
S10,S11,S12,S13

TYPICAL ARCH FOOTING DETAIL

NOT TO SCALE

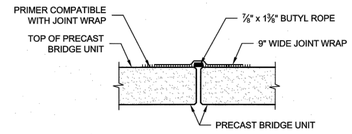

TYPICAL JOINT SEAL DETAIL

NOT TO SCALE

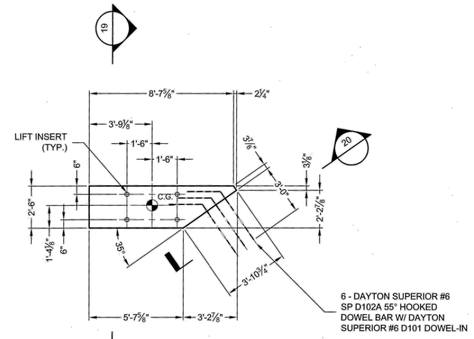

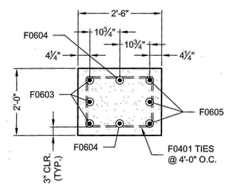

SECTION 19

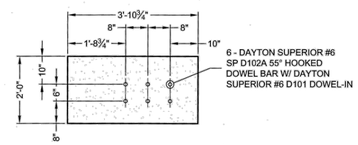

SECTION 20

TYPICAL WINGWALL FOOTING – UPSTREAM

NOT TO SCALE

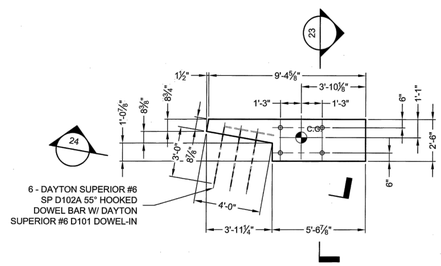

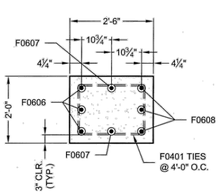

SECTION 23

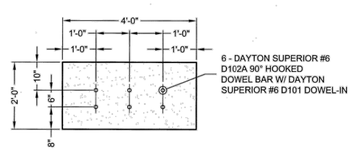

SECTION 24

TYPICAL WINGWALL FOOTING – DOWNSTREAM

NOT TO SCALE

DATE	REVISION	BY

PREPARED FOR:
TOWN OF WESTFORD
ENGINEERING DEPARTMENT
28 NORTH STREET
WESTFORD, MA 01886

DESIGN	DRAFT	CHECK
ART	ART	CML

FOUNDATION PLAN AND DETAILS
KEYES BROOK CULVERT
GROTON ROAD (ROUTE 40)
WESTFORD, MA

SCALE: AS SHOWN

NOVEMBER 14, 2012

LandTech Consultants
Engineering/Design/Surveying/Permitting
515 Groton Road, – Westford, MA 01886
Ph: (978) 692–6100 – landtechinc.com

COPYRIGHT © 2012

REPRODUCTION OF THIS PLAN IN WHOLE OR PART IS PROHIBITED WITHOUT THE WRITTEN CONSENT OF THE DESIGN ENGINEER AND/OR FIRM.

JOB NO.	DWG. NO.	SHEET
12–101	9514	BR–4

ROUTE 40
KEYES BROOK CULVERT
GROTON ROAD
WESTFORD, MASSACHUSETTS

NOTES

GENERAL NOTES:

1. THIS BRIDGE HAS BEEN DESIGNED FOR GENERAL SITE CONDITIONS. THE PROJECT ENGINEER SHALL BE RESPONSIBLE FOR THE STRUCTURE'S SUITABILITY TO THE EXISTING SITE CONDITIONS AND FOR THE HYDRAULIC EVALUATION -- INCLUDING SCOUR AND CONFIRMATION OF SOIL CONDITIONS.
2. PRIOR TO CONSTRUCTION, CONTRACTOR MUST VERIFY ALL ELEVATIONS SHOWN THROUGH THE ENGINEER.
3. ONLY CONTECH ENGINEERED SOLUTIONS LLC, THE CON/SPAN® APPROVED PRECASTER IN MASSACHUSETTS MAY PROVIDE THE STRUCTURE DESIGNED IN ACCORDANCE WITH THESE PLANS.
4. THE USE OF ANOTHER PRECAST STRUCTURE WITH THE DESIGN ASSUMPTIONS USED FOR THE CON/SPAN® STRUCTURE MAY LEAD TO SERIOUS DESIGN ERRORS. USE OF ANY OTHER PRECAST STRUCTURE WITH THIS DESIGN AND DRAWINGS VOIDS ANY CERTIFICATION OF THIS DESIGN AND WARRANTY. CONTECH ENGINEERED SOLUTIONS, LLC ASSUMES NO LIABILITY FOR DESIGN OF ANY ALTERNATE OR SIMILAR TYPE STRUCTURES.
5. ALTERNATE STRUCTURES MAY BE CONSIDERED, PROVIDED THAT DRAWINGS AND CALCULATIONS SIGNED AND SEALED BY A PROFESSIONAL ENGINEER, REGISTERED IN THE STATE OF MASSACHUSETTS, EMPLOYED BY THE PRECAST CONCRETE BRIDGE SUPPLIER, ARE SUBMITTED TO THE ENGINEER 2 WEEKS PRIOR TO THE BID DATE FOR REVIEW AND APPROVAL.
6. ALTERNATE STRUCTURES MAY BE CONSIDERED, PROVIDED THAT THE ALTERNATE DESIGN DOES NOT REDUCE THE HYDRAULIC OPENING OF THE STRUCTURE AS SHOWN ON THE DRAWINGS. AT A MINIMUM THE ALTERNATE STRUCTURE MUST PROVIDE THE SAME OR LARGER SPAN AND RISE AS THE STRUCTURE SHOWN ON THE DRAWINGS.
7. THE PRECAST ARCH SUPPLIER MUST ATTEND THE PRE-BID MEETING, IF ONE IS HELD.
8. SUPPLIER OF PROPOSED ALTERNATES TO A CON/SPAN® BRIDGE SYSTEM MUST SUBMIT AT LEAST TWO (2) INDEPENDENTLY VERIFIED FULL SCALE LOAD TESTS THAT CONFIRM THE PROPOSED DESIGN METHODOLOGY OF THE THREE SIDED/ARCH STRUCTURE(S). THE PROPOSED ALTERNATE, UPON SATISFACTORY CONFIRMATION OF DESIGN METHODOLOGY, MAY BE CONSIDERED AN ACCEPTABLE ALTERNATE.
9. PROPOSED ALTERNATE STRUCTURES MAY BE CONSIDERED, PROVIDED THAT THE PRECAST CONCRETE BRIDGE STRUCTURES ARE PROVIDED BY A SUPPLIER THAT HAS A MINIMUM OF TWO (2) REGISTERED PROFESSIONAL ENGINEERS ON STAFF THAT ARE DEDICATED TO THE DESIGN OF THESE TYPES OF STRUCTURES. SUPPLIER MUST PROVIDE THESE NAMES, P.E. LICENSE NUMBERS AND DATES OF HIRE AT TIME OF ALTERNATE SUBMITTAL.

DESIGN DATA

1

DESIGN LOADING:
- BRIDGE UNITS: HL-93
- HEADWALLS: EARTH PRESSURE + LIVE LOAD SURCHARGE
- WINGWALLS: EARTH PRESSURE & LIVE LOAD SURCHARGE

DESIGN FILL HEIGHT: 2'-0" MIN. - 8'-6" MAX.
FROM TOP OF CROWN TO TOP OF PAVEMENT.
DESIGN METHOD: LOAD RESISTANCE FACTOR DESIGN PER AASHTO LRFD SPECIFICATION
NOMINAL BEARING RESISTANCE: 18,900 PSF *
FACTORED BEARING RESISTANCE: 6250 PSF * 2

*FOUNDATION EXCAVATION AND SUBGRADE PREPARATION SHALL BE IN ACCORDANCE WITH THE GEOTECHNICAL REPORT FOR THIS PROJECT PREPARED BY MILLER ENGINEERING & TESTING, INC., & EMAIL DATED 1/25/2016

MATERIALS

2

PRECAST UNITS SHALL BE CONSTRUCTED AND INSTALLED IN ACCORDANCE WITH CON/SPAN® SPECIFICATIONS. CONCRETE FOR FOOTINGS SHALL HAVE A MINIMUM COMPRESSIVE STRENGTH OF 4000 PSI. REINFORCING STEEL FOR FOOTINGS SHALL CONFORM TO ASTM A615 OR A996-GRADE 60.

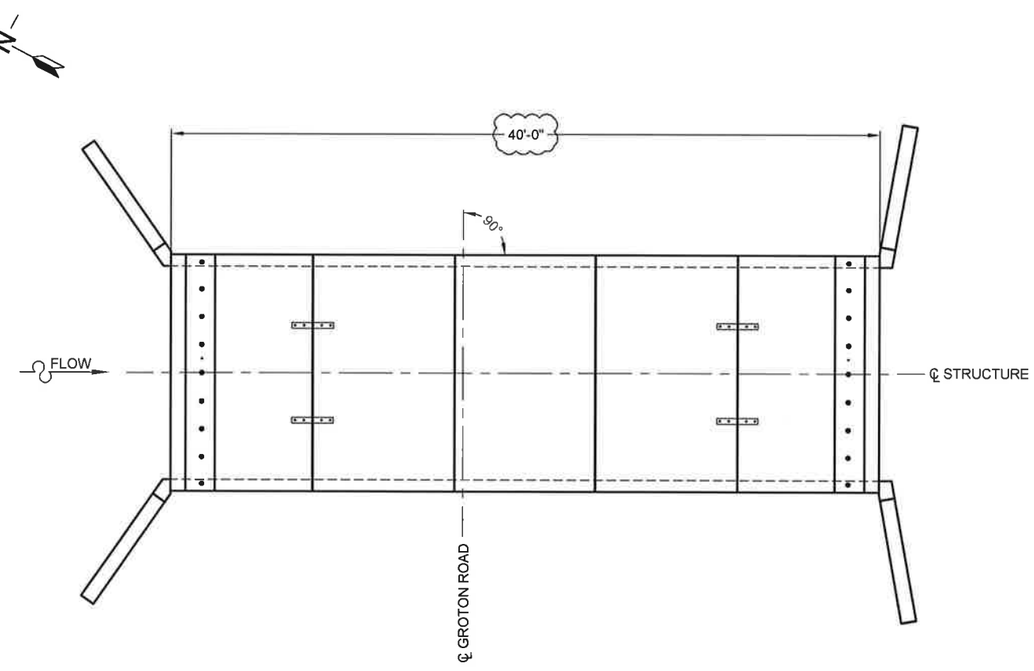

LOCATION PLAN

NOT TO SCALE

4/5/16

COMMONWEALTH OF MASSACHUSETTS
PHILIP A. CREAMER
CIVIL
NO. 48747
REGISTERED PROFESSIONAL ENGINEER

The design and information shown on this drawing is provided as a service to the project owner, engineer and contractor by Contech Engineered Solutions LLC ("Contech"). Neither this drawing, nor any part thereof, may be used, reproduced or modified in any manner without the prior written consent of Contech. Failure to comply is done at the user's own risk and Contech expressly disclaims any liability or responsibility for such use.

If discrepancies between the supplied information upon which the drawing is based and actual field conditions are encountered as site work progresses, these discrepancies must be reported to Contech immediately for re-evaluation of the design. Contech accepts no liability for designs based on missing, incomplete or inaccurate information supplied by others.

MARK	DATE	REVISION DESCRIPTION	BY
3	4/5/2016	CHANGES PER REVIEW COMMENTS	RJS
2	2/3/2016	ADDED EXPRESS FOOTING DESIGN	JDR
1	1/13/2016	CHANGES PER REVIEW COMMENTS	JDR

CONTECH® ENGINEERED SOLUTIONS LLC
www.ContechES.com
9025 Centre Pointe Dr., Suite 400, West Chester, OH 45069
800-338-1122 513-645-7000 513-645-7993 FAX

CON/SPAN® BRIDGE SYSTEMS
EXPRESS® Foundations
CONTRACT DRAWING

ROUTE 40
KEYES BROOK CULVERT
GROTON ROAD
WESTFORD, MASSACHUSETTS

PROJECT No.: 460045	SEQ. No.: 001	DATE: 2/19/2015
DESIGNED: JDR	DRAWN: DLB	
CHECKED: EMW	APPROVED: PAC	
SHEET NO.: CT1 OF CT8		

\\AD.CONTECH-CPI.COM\ROOT\MERLIN\PROJECTS\ACTIVE\460000\460045\460045-1-CON_SPAN\DRAWINGS\CONTRACT\PRE-460045-010-CB-CON-C.DWG 4/5/2016 4:01 PM

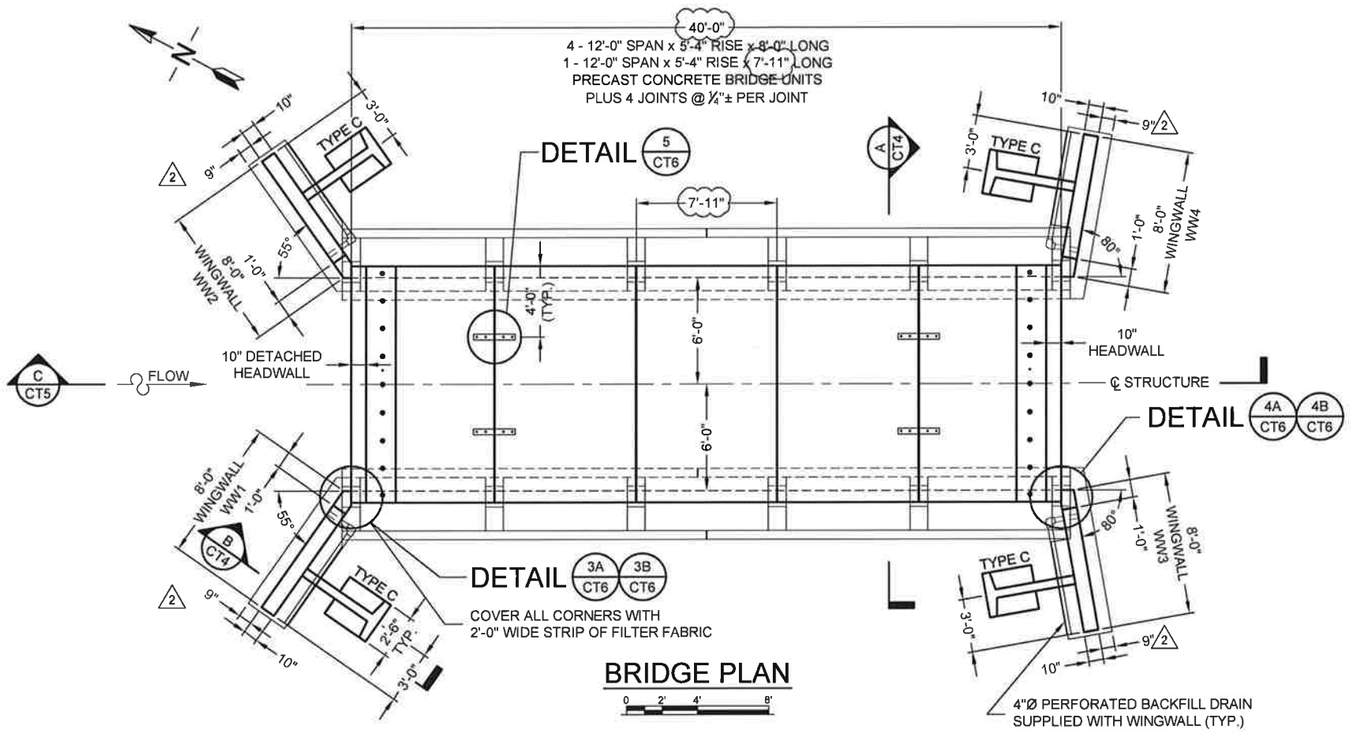

BRIDGE PLAN

0 2' 4' 8'

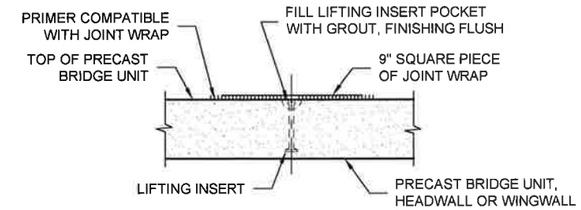

TYPICAL LIFT INSERT SEALING DETAIL

NOT TO SCALE

4/5/16

COMMONWEALTH OF MASSACHUSETTS
PHILIP A. CREAMER
CIVIL
NO. 48747
REGISTERED PROFESSIONAL ENGINEER

The design and information shown on this drawing is provided as a service to the project owner, engineer and contractor by Contech Engineered Solutions LLC ("Contech"). Neither this drawing, nor any part thereof, may be used, reproduced or modified in any manner without the prior written consent of Contech. Failure to comply is done at the user's own risk and Contech expressly disclaims any liability or responsibility for such use.

If discrepancies between the supplied information upon which the drawing is based and actual field conditions are encountered as site work progresses, these discrepancies must be reported to Contech immediately for re-evaluation of the design. Contech accepts no liability for designs based on missing, incomplete or inaccurate information supplied by others.

MARK	DATE	REVISION DESCRIPTION	BY
3	4/5/2016	CHANGES PER REVIEW COMMENTS	RJS
2	2/3/2016	ADDED EXPRESS FOOTING DESIGN	JDR
1	1/13/2016	NO CHANGES THIS SHEET	JDR

CONTECH®
ENGINEERED SOLUTIONS LLC
www.ContechES.com
9025 Centre Pointe Dr., Suite 400, West Chester, OH 45069
800-338-1122 513-645-7000 513-645-7993 FAX

CONSPAN® BRIDGE SYSTEMS
EXPRESS® Foundations
CONTRACT DRAWING

ROUTE 40
KEYES BROOK CULVERT
GROTON ROAD
WESTFORD, MASSACHUSETTS

PROJECT No.:	SEQ. No.:	DATE:
460045	001	2/19/2015
DESIGNED: JDR		DRAWN: DLB
CHECKED: EMW		APPROVED: PAC
SHEET NO.: CT2 OF CT8		

\\AD.CONTECH.CPI.COM\ROOT\MERLIN\PROJECTACTIVE\460000\460045\460045-1-CON_SPAN\DRAWINGS\CONTRACT\PRE-460045-010-CB-CON-C.DWG 4/5/2016 4:01 PM

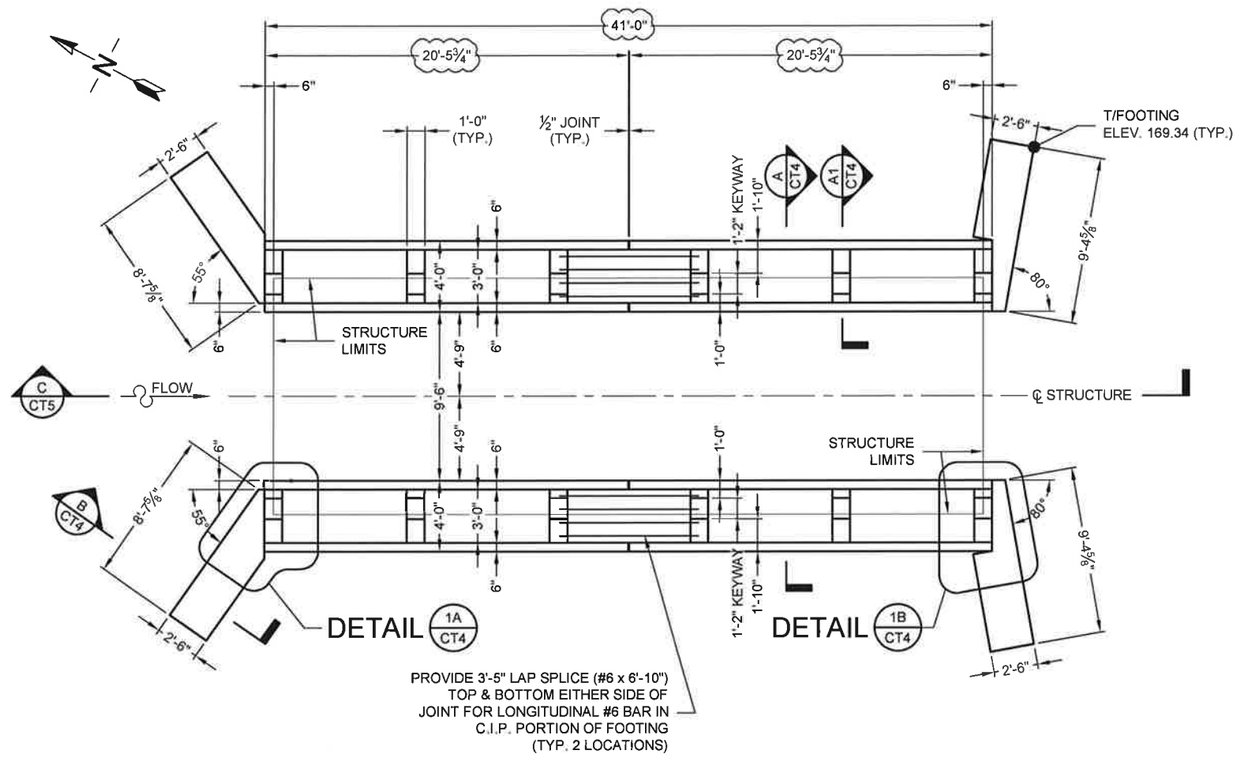

2

FOUNDATION PLAN

0 2' 4' 8'

2

CAST IN PLACE CONCRETE VOLUME 15.6 CUBIC YARDS CONCRETE VOLUME IS ACTUAL REQUIRED AMOUNT AND SHOULD BE INCREASED FOR ANTICIPATED LEAKAGE, WASTE, ETC.

2

PRECAST REINFORCED CONCRETE EXPRESS™ FOUNDATION NOTES:

1. PRECAST FOUNDATION UNITS SHALL BE CONSTRUCTED AND INSTALLED IN ACCORDANCE WITH SPECIFICATIONS FOR MANUFACTURE AND INSTALLATION OF CON/SPAN BRIDGE SYSTEMS.
2. PRECAST AND CAST-IN-PLACE CONCRETE FOR EXPRESS FOUNDATIONS SHALL HAVE A MINIMUM 28-DAY COMPRESSIVE STRENGTH OF 4000 PSI. REINFORCING STEEL FOR FOUNDATIONS SHALL CONFORM TO ASTM A615 OR A996, GRADE 60.
3. PRECAST FOUNDATION UNITS SHALL BE SET ON A MINIMUM 4-INCH THICK BASE LAYER OF COMPACTED GRANULAR MATERIAL THE FULL WIDTH OF THE FOUNDATION.
4. COMPACTED BACKFILL MATERIAL MUST BE PLACED UP TO THE TOP OF THE PRECAST FOUNDATION UNITS ON BOTH SIDES PRIOR TO PLACING CAST-IN-PLACE CONCRETE PORTION OF FOUNDATIONS.
5. CONCRETE SURFACES WHICH CAST-IN-PLACE CONCRETE WILL BE PLACED AGAINST SHALL BE CLEAN, FREE OF LAITANCE, DIRT, STANDING WATER AND ANY OTHER MATERIAL THAT MAY IMPAIR THE BOND BETWEEN THE PRECAST CONCRETE AND CAST-IN-PLACE CONCRETE.
6. CAST-IN-PLACE CONCRETE MIX USED TO FILL FOUNDATION SHALL BE ABLE TO FLOW INTO ARCH SHIM SPACE OR NON-SHRINK GROUT SHALL BE PLACED UNDER ARCH UNIT LEG AT FOUNDATION CROSS MEMBERS PRIOR TO PLACEMENT OF CAST-IN-PLACE PORTION OF FOUNDATION.
7. IF THE AMBIENT TEMPERATURE AT THE TIME OF PLACEMENT OF CAST-IN-PLACE CONCRETE IS ABOVE 90°F OR EXPECTED TO GO BELOW 35°F DURING THE CURE PERIOD, THE CONTRACTOR SHALL FOLLOW THE REQUIREMENTS OF THE LATEST EDITION OF THE AASHTO LRFD BRIDGE CONSTRUCTION SPECIFICATIONS, SECTION 8.6.2 HOT WEATHER PROTECTION OR SECTION 8.6.4 COLD WEATHER PROTECTION.
8. IF PRECAST ARCH UNITS ARE TO BE ERECTED ON PRECAST FOUNDATION UNITS PRIOR TO PLACEMENT OF CAST-IN-PLACE CONCRETE, THE CABLE TIES/RODS (SHIPPED WITH LONG-SPAN STRUCTURES) MUST REMAIN IN PLACE AND MAY NOT BE REMOVED UNTIL CAST-IN-PLACE CONCRETE HAS REACHED A MINIMUM COMPRESSIVE STRENGTH OF 2000 PSI.
9. IF CABLE TIES/RODS (SHIPPED WITH LONG-SPAN STRUCTURES) MUST BE REMOVED PRIOR TO SETTING OF ARCH UNITS, CAST-IN-PLACE CONCRETE PORTION OF FOUNDATIONS MUST BE PLACED AND ALLOWED TO REACH A MINIMUM COMPRESSIVE STRENGTH OF 2000 PSI BEFORE PLACEMENT OF PRECAST ARCH UNITS, HEADWALLS AND WINGWALLS. CONTRACTOR MUST FOLLOW SPECIFICATION SECTION 13.4 AND NOTIFY CONTECH ENGINEER PRIOR TO REMOVING CABLES TIES/RODS.
10. IF CAST-IN-PLACE CONCRETE PORTION OF FOUNDATION IS TO BE PLACED PRIOR TO SETTING OF ARCH UNITS, HEADWALLS OR WINGWALLS, CAST-IN-PLACE CONCRETE SHALL REACH A MINIMUM COMPRESSIVE STRENGTH OF 2000 PSI BEFORE PRECAST ARCH UNITS, HEADWALLS AND WINGWALLS ARE SET.
11. FOUNDATION CONCRETE SHALL REACH ITS FULL DESIGN STRENGTH BEFORE BACKFILLING OF ARCH UNITS MAY COMMENCE.

4/5/16

COMMONWEALTH OF MASSACHUSETTS
PHILIP A. CREAMER
CIVIL
NO. 49747
REGISTERED PROFESSIONAL ENGINEER

The design and information shown on this drawing is provided as a service to the project owner, engineer and contractor by Contech Engineered Solutions LLC ("Contech"). Neither this drawing, nor any part thereof, may be used, reproduced or modified in any manner without the prior written consent of Contech. Failure to comply is done at the user's own risk and Contech expressly disclaims any liability or responsibility for such use.

If discrepancies between the supplied information upon which the drawing is based and actual field conditions are encountered as site work progresses, these discrepancies must be reported to Contech immediately for re-evaluation of the design. Contech accepts no liability for designs based on missing, incomplete or inaccurate information supplied by others.

MARK	DATE	REVISION DESCRIPTION	BY
3	4/5/2016	CHANGES PER REVIEW COMMENTS	RJS
2	2/3/2016	ADDED EXPRESS FOOTING DESIGN	JDR
1	1/13/2016	NO CHANGES THIS SHEET	JDR

CONTECH® ENGINEERED SOLUTIONS LLC
www.ContechES.com
9025 Centre Pointe Dr., Suite 400, West Chester, OH 45069
800-338-1122 513-645-7000 513-645-7993 FAX

CON/SPAN® BRIDGE SYSTEMS
EXPRESS® Foundations
CONTRACT DRAWING

ROUTE 40
KEYES BROOK CULVERT
GROTON ROAD
WESTFORD, MASSACHUSETTS

PROJECT No.: 460045	SEQ. No.: 001	DATE: 2/19/2015
DESIGNED: JDR	DRAWN: DLB	
CHECKED: EMW	APPROVED: PAC	
SHEET NO.: CT3 OF CT8		

\\AD.CONTECH-CPI.COM\ROOTWEB\IN\PROJECTACTIVE\460000\460045\460045-1-CON_SPAN\DRAWINGS\CONTRACT\PRE-460045-010-CB-CON-C.DWG 4/5/2016 4:01 PM

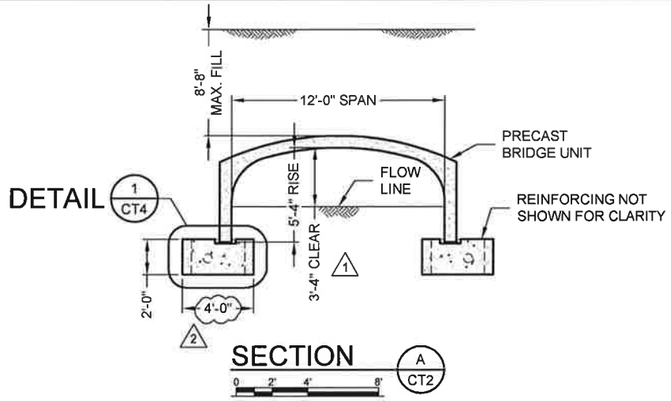

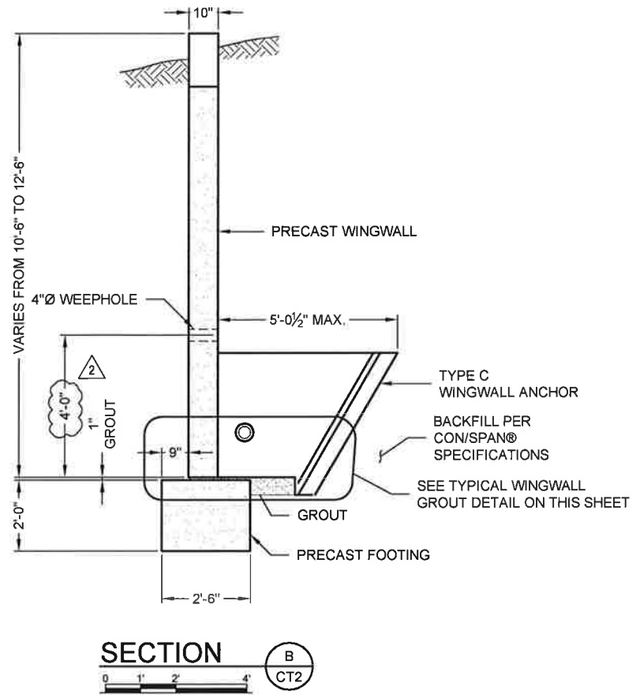

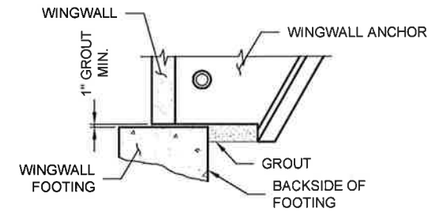

NOTES:
- MINIMUM 1" GROUT UNDER WINGWALL LEG & ANCHOR STEM.
- AREA BETWEEN WINGWALL FOOTING AND WINGWALL ANCHOR SHALL BE GROUTED SOLID BEFORE BACKFILL.
- FORM BACKSIDE OF FOOTING TO DIMENSIONS SHOWN ON FOUNDATION PLAN.

TYPICAL WINGWALL GROUT DETAIL

NOT TO SCALE

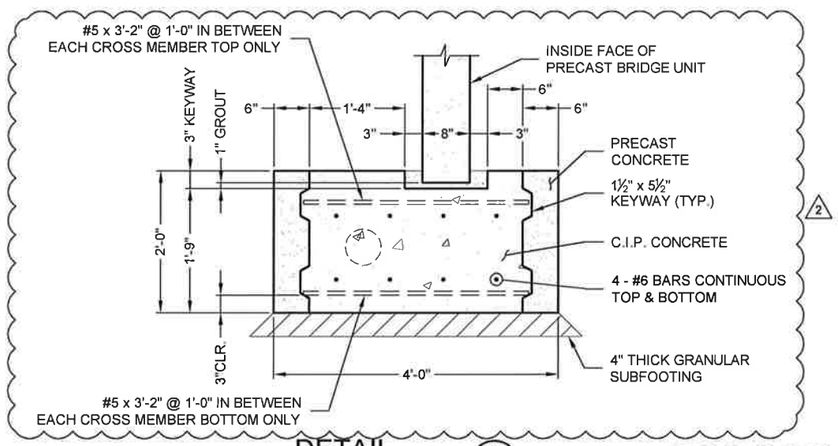

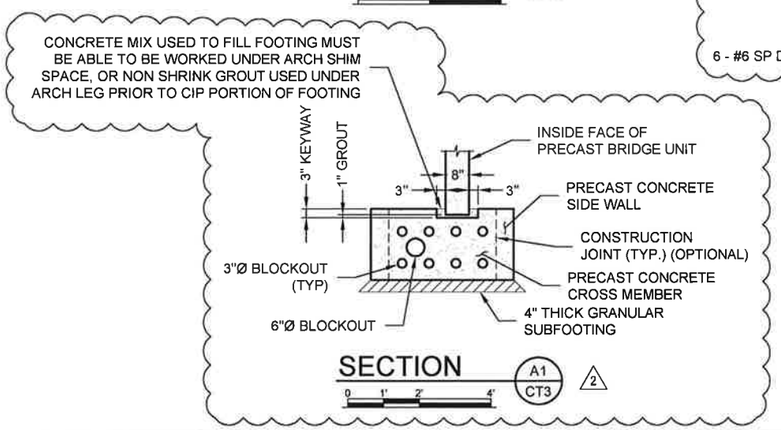

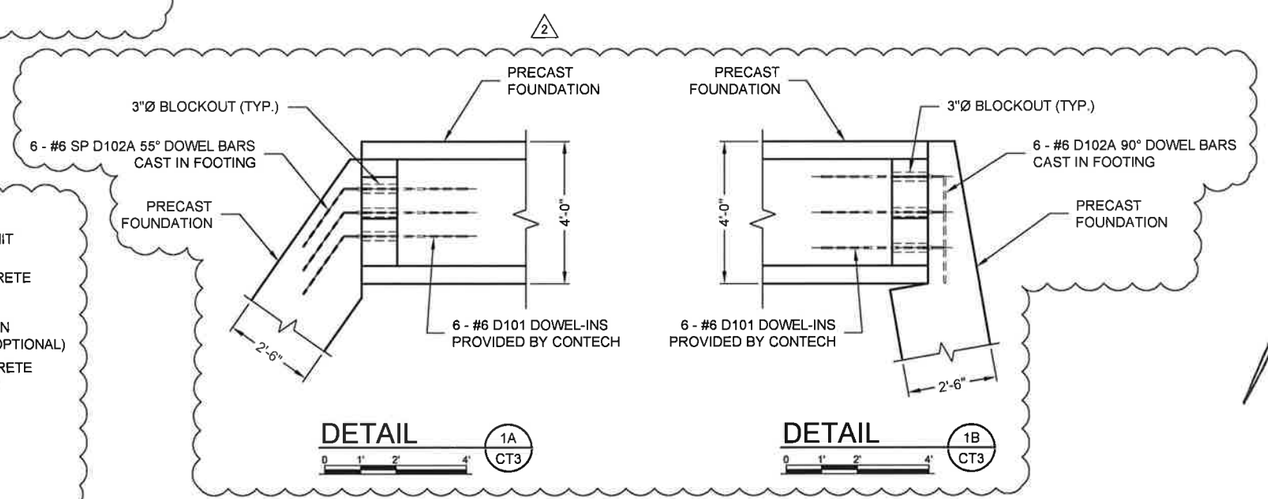

4/5/16

COMMONWEALTH OF MASSACHUSETTS
PHILIP A. CREAMER
CIVIL
NO. 48747
REGISTERED PROFESSIONAL ENGINEER

The design and information shown on this drawing is provided as a service to the project owner, engineer and contractor by Contech Engineered Solutions LLC ("Contech"). Neither this drawing, nor any part thereof, may be used, reproduced or modified in any manner without the prior written consent of Contech. Failure to comply is done at the user's own risk and Contech expressly disclaims any liability or responsibility for such use.

If discrepancies between the supplied information upon which the drawing is based and actual field conditions are encountered as site work progresses, these discrepancies must be reported to Contech immediately for re-evaluation of the design. Contech accepts no liability for designs based on missing, incomplete or inaccurate information supplied by others.

MARK	DATE	REVISION DESCRIPTION	BY
3	4/5/2016	CHANGES PER REVIEW COMMENTS	RJS
2	2/3/2016	ADDED EXPRESS FOOTING DESIGN	JDR
1	1/13/2016	CHANGES PER REVIEW COMMENTS	JDR

CONTECH® ENGINEERED SOLUTIONS LLC
www.ContechES.com
9025 Centre Pointe Dr., Suite 400, West Chester, OH 45069
800-338-1122 513-645-7000 513-645-7993 FAX

CON/SPAN® BRIDGE SYSTEMS
EXPRESS Foundations
CONTRACT DRAWING

ROUTE 40
KEYES BROOK CULVERT
GROTON ROAD
WESTFORD, MASSACHUSETTS

PROJECT No.: 460045	SEQ. No.: 001	DATE: 2/19/2015
DESIGNED: JDR		DRAWN: DLB
CHECKED: EMW		APPROVED: PAC
SHEET NO.: CT4 OF CT8		

\\AD.CONTECH-CPI.COM\ROOT\WEB\UNIPROJECT\ACTIVE\460000\460045\460045-1-CON_SPAN\DRAWINGS\CONTRACT\PRE-460045-010-CB-CON-C.DWG 4/5/2016 4:01 PM

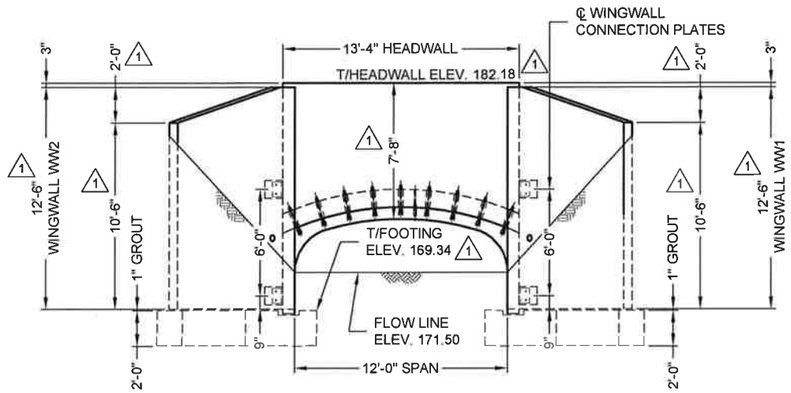

UPSTREAM END ELEVATION

0 2' 4' 8'

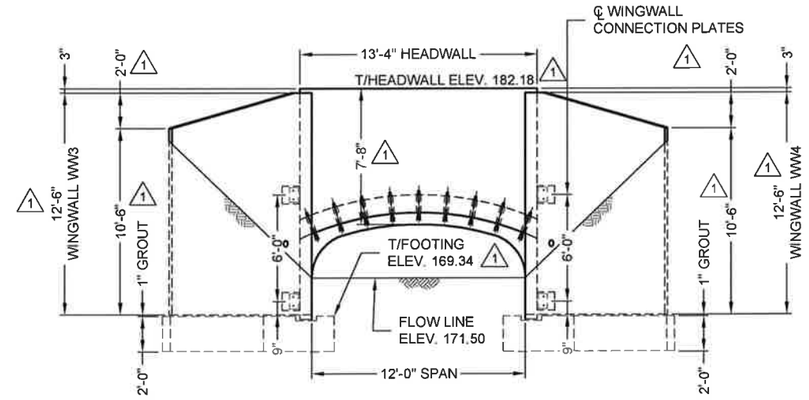

DOWNSTREAM END ELEVATION

0 2' 4' 8'

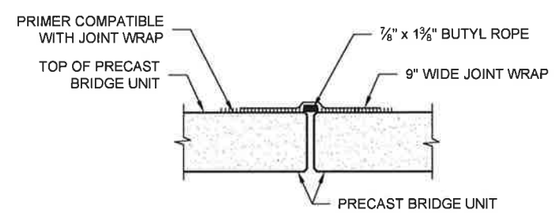

TYPICAL JOINT SEAL DETAIL

NOT TO SCALE

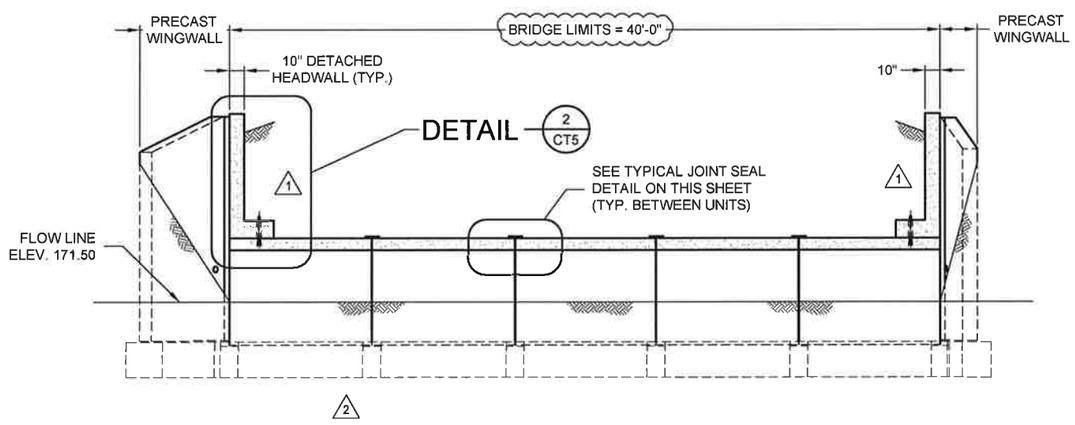

SECTION C CT2

0 2' 4' 8'

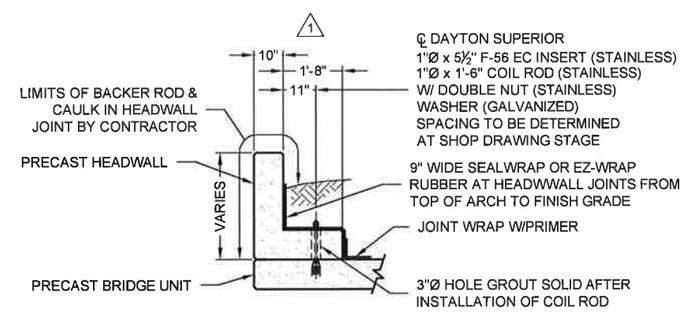

DETAIL 2 CT5

0 1' 2' 4'

4/5/16

The design and information shown on this drawing is provided as a service to the project owner, engineer and contractor by Contech Engineered Solutions LLC ("Contech"). Neither this drawing, nor any part thereof, may be used, reproduced or modified in any manner without the prior written consent of Contech. Failure to comply is done at the user's own risk and Contech expressly disclaims any liability or responsibility for such use.

If discrepancies between the supplied information upon which the drawing is based and actual field conditions are encountered as site work progresses, these discrepancies must be reported to Contech immediately for re-evaluation of the design. Contech accepts no liability for designs based on missing, incomplete or inaccurate information supplied by others.

MARK	DATE	REVISION DESCRIPTION	BY
3	4/5/2016	CHANGES PER REVIEW COMMENTS	RJS
2	2/3/2016	ADDED EXPRESS FOOTING DESIGN	JDR
1	1/13/2016	CHANGES PER REVIEW COMMENTS	JDR

CONTECH®
ENGINEERED SOLUTIONS LLC
www.ContechES.com
9025 Centre Pointe Dr., Suite 400, West Chester, OH 45069
800-338-1122 513-645-7000 513-645-7993 FAX

CONSPAN® BRIDGE SYSTEMS
EXPRESS Foundations
CONTRACT DRAWING

ROUTE 40
KEYES BROOK CULVERT
GROTON ROAD
WESTFORD, MASSACHUSETTS

PROJECT No.: 460045	SEQ. No.: 001	DATE: 2/19/2015
DESIGNED: JDR	DRAWN: DLB	
CHECKED: EMW	APPROVED: PAC	
SHEET NO.: CT5 OF CT8		

\\AD.CONTECH-CPI.COM\ROOT\MER\UNPROJECT\ACTIVE\460000\460045\460045-1-CON_SPAN\DRAWINGS\CONTR\ACT\PRE-460045-010-CB-CON-C.DWG 4/5/2016 4:01 PM

NOTE:
CONNECTION ℙ'S (P-1) MUST BE POSITIONED WITH SMALL Ø HOLES TOWARD PRECAST BRIDGE UNIT

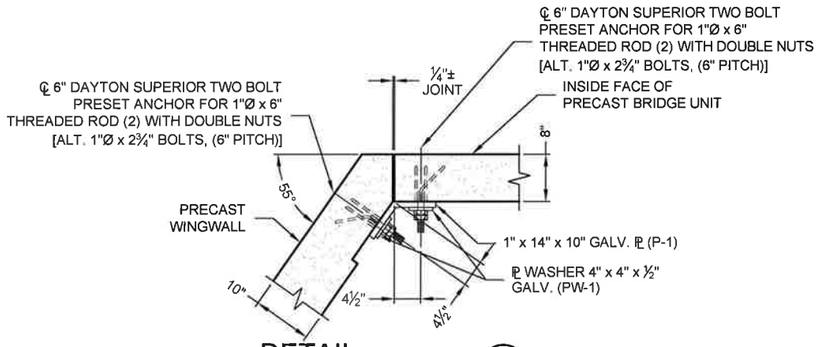

DETAIL @ UNIT LEG (3A / CT2)

0 1' 2'

NOTE:
CONNECTION ℙ'S (P-1) MUST BE POSITIONED WITH SMALL Ø HOLES TOWARD PRECAST HEADWALL

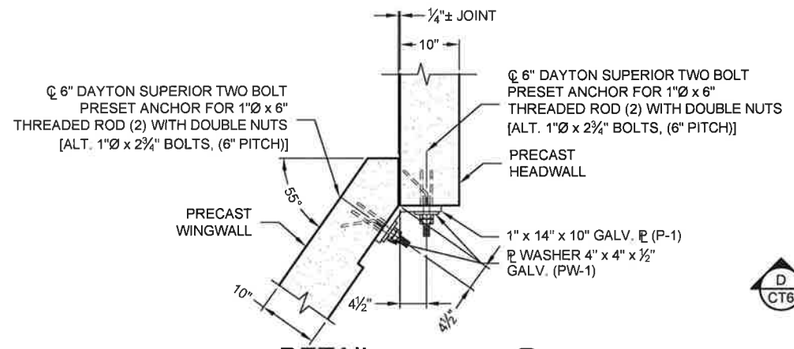

DETAIL @ HEADWALL (3B / CT2)

0 1' 2'

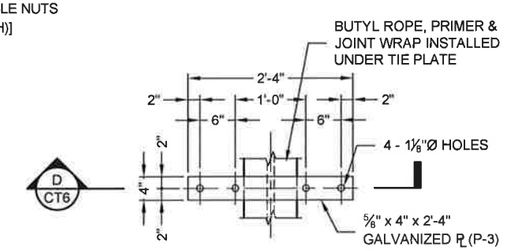

DETAIL (5 / CT2)
NOT TO SCALE

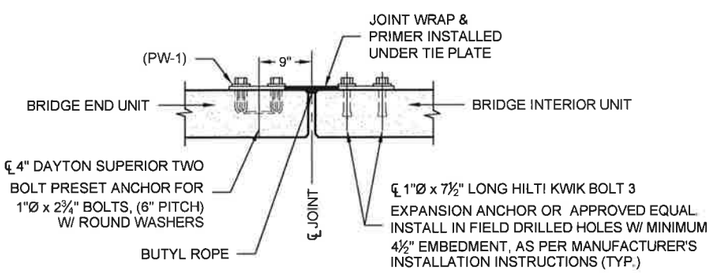

SECTION (D / CT6)
NOT TO SCALE

NOTE:
CONNECTION ℙ'S (P-2) MUST BE POSITIONED WITH SMALL Ø HOLES TOWARD PRECAST BRIDGE UNIT

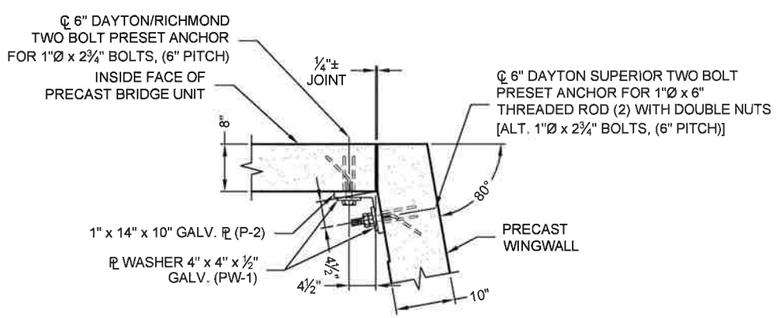

DETAIL @ UNIT LEG (4A / CT2)

0 1' 2'

NOTE:
CONNECTION ℙ'S (P-2) MUST BE POSITIONED WITH SMALL Ø HOLES TOWARD PRECAST HEADWALL

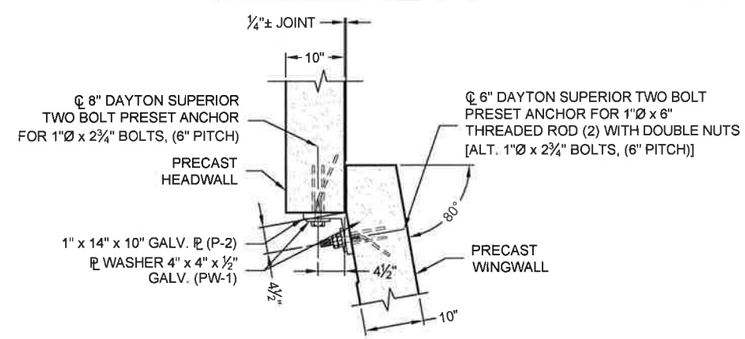

DETAIL @ HEADWALL (4B / CT2)

0 1' 2'

4/15/16

The design and information shown on this drawing is provided as a service to the project owner, engineer and contractor by Contech Engineered Solutions LLC ("Contech"). Neither this drawing, nor any part thereof, may be used, reproduced or modified in any manner without the prior written consent of Contech. Failure to comply is done at the user's own risk and Contech expressly disclaims any liability or responsibility for such use.

If discrepancies between the supplied information upon which the drawing is based and actual field conditions are encountered as site work progresses, these discrepancies must be reported to Contech immediately for re-evaluation of the design. Contech accepts no liability for designs based on missing, incomplete or inaccurate information supplied by others.

MARK	DATE	REVISION DESCRIPTION	BY
3	4/5/2016	CHANGES PER REVIEW COMMENTS	RJS
2	2/3/2016	NO CHANGES THIS SHEET	JDR
1	1/13/2016	NO CHANGES THIS SHEET	JDR

CONTECH® ENGINEERED SOLUTIONS LLC
www.ContechES.com
9025 Centre Pointe Dr., Suite 400, West Chester, OH 45069
800-338-1122 513-645-7000 513-645-7993 FAX

CONSPAN® BRIDGE SYSTEMS
EXPRESS® Foundations
CONTRACT DRAWING

ROUTE 40
KEYES BROOK CULVERT
GROTON ROAD
WESTFORD, MASSACHUSETTS

PROJECT No.: 460045	SEQ. No.: 001	DATE: 2/19/2015
DESIGNED: JDR	DRAWN: DLB	
CHECKED: EMW	APPROVED: PAC	
SHEET NO.: CT6 OF CT8		

\\AD.CONTECH-CPI.COM\ROOT\MERLIN\PROJECTACTIVE\460000\460045\460045-1-CON_SPAN\DRAWINGS\CONTRACT\PRE-460045-010-CB-CON-C.DWG 4/5/2016 4:02 PM

SPECIFICATIONS FOR MANUFACTURE AND INSTALLATION OF CON/SPAN® BRIDGE SYSTEMS

1. DESCRIPTION
   1.1. TYPE - THIS WORK SHALL CONSIST OF FURNISHING AND CONSTRUCTING A CON/SPAN® BRIDGE SYSTEM IN ACCORDANCE WITH THESE SPECIFICATIONS AND IN REASONABLY CLOSE CONFORMITY WITH THE LINES, GRADES, DESIGN AND DIMENSIONS SHOWN ON THE PLANS OR AS ESTABLISHED BY THE ENGINEER. IN SITUATIONS WHERE TWO OR MORE SPECIFICATIONS APPLY TO THIS WORK, THE MOST STRINGENT REQUIREMENTS SHALL GOVERN.
   1.2. DESIGNATION - PRECAST REINFORCED CONCRETE CON/SPAN® BRIDGE UNITS MANUFACTURED IN ACCORDANCE WITH THIS SPECIFICATION SHALL BE DESIGNATED BY SPAN AND RISE. PRECAST REINFORCED CONCRETE WINGWALLS AND HEADWALLS MANUFACTURED IN ACCORDANCE WITH THIS SPECIFICATION SHALL BE DESIGNATED BY LENGTH, HEIGHT, AND DEFLECTION ANGLE. PRECAST REINFORCED CONCRETE EXPRESS™ FOUNDATION UNITS MANUFACTURED IN ACCORDANCE WITH THIS SPECIFICATION SHALL BE DESIGNATED BY LENGTH, HEIGHT AND WIDTH.

2. DESIGN
   2.1. SPECIFICATIONS - THE PRECAST ELEMENTS ARE DESIGNED IN ACCORDANCE WITH THE "AASHTO LRFD BRIDGE SPECIFICATION" 7TH EDITION, ADOPTED BY THE AMERICAN ASSOCIATION OF STATE HIGHWAY AND TRANSPORTATION OFFICIALS, 2015. A MINIMUM OF ONE FOOT OF COVER ABOVE THE CROWN OF THE BRIDGE UNITS IS REQUIRED IN THE INSTALLED CONDITION. (UNLESS NOTED OTHERWISE ON THE SHOP DRAWINGS AND DESIGNED ACCORDINGLY.)

3. MATERIALS
   3.1. CONCRETE - THE CONCRETE FOR THE PRECAST ELEMENTS SHALL BE AIR-ENTRAINED WHEN INSTALLED IN AREAS SUBJECT TO FREEZE-THAW CONDITIONS, COMPOSED OF PORTLAND CEMENT, FINE AND COARSE AGGREGATES, ADMIXTURES AND WATER. AIR-ENTRAINED CONCRETE SHALL CONTAIN 6 ± 2 PERCENT AIR. THE AIR- ENTRAINING ADMIXTURE SHALL CONFORM TO AASHT0 M154. THE MINIMUM CONCRETE COMPRESSIVE STRENGTH SHALL BE AS SHOWN ON THE SHOP DRAWINGS.
      3.1.1. PORTLAND CEMENT - SHALL CONFORM TO THE REQUIREMENTS OF ASTM SPECIFICATIONS C150-TYPE I, TYPE II, OR TYPE III CEMENT.
      3.1.2. COARSE AGGREGATE - SHALL CONSIST OF STONE HAVING A MAXIMUM SIZE OF 1 INCH. AGGREGATE SHALL MEET REQUIREMENTS FOR ASTM C33.
      3.1.3. WATER REDUCING ADMIXTURE - THE MANUFACTURER MAY SUBMIT, FOR APPROVAL BY THE ENGINEER, A WATER-REDUCING ADMIXTURE FOR THE PURPOSE OF INCREASING WORKABILITY AND REDUCING THE WATER REQUIREMENT FOR THE CONCRETE.
      3.1.4. CALCIUM CHLORIDE - THE ADDITION TO THE MIX OF CALCIUM CHLORIDE OR ADMIXTURES CONTAINING CALCIUM CHLORIDE WILL NOT BE PERMITTED.
      3.1.5. MIXTURE - THE AGGREGATES, CEMENT AND WATER SHALL BE PROPORTIONED AND MIXED IN A BATCH MIXER TO PRODUCE A HOMOGENEOUS CONCRETE MEETING THE STRENGTH REQUIREMENTS OF THIS SPECIFICATION. THE PROPORTION OF PORTLAND CEMENT IN THE MIXTURE SHALL NOT BE LESS THAN 564 POUNDS (6 SACKS) PER CUBIC YARD OF CONCRETE.
   3.2. STEEL REINFORCEMENT
      3.2.1. THE MINIMUM STEEL YIELD STRENGTH SHALL BE 60,000 PSI, UNLESS OTHERWISE NOTED ON THE SHOP DRAWINGS.
      3.2.2. ALL REINFORCING STEEL FOR THE PRECAST ELEMENTS SHALL BE FABRICATED AND PLACED IN ACCORDANCE WITH THE DETAILED SHOP DRAWINGS SUBMITTED BY THE MANUFACTURER.
      3.2.3. REINFORCEMENT SHALL CONSIST OF WELDED WIRE REINFORCING CONFORMING TO ASTM SPECIFICATION A 1064, OR DEFORMED BILLET STEEL BARS CONFORMING TO ASTM SPECIFICATION A 615, GRADE 60. LONGITUDINAL DISTRIBUTION REINFORCEMENT MAY CONSIST OF WELDED WIRE FABRIC OR DEFORMED BILLET-STEEL BARS.
   3.3. STEEL HARDWARE
      3.3.1. BOLTS AND THREADED RODS FOR WINGWALL CONNECTIONS SHALL CONFORM TO ASTM A 307. NUTS SHALL CONFORM TO AASHTO M292 (ASTM A194) GRADE 2H. ALL BOLTS, THREADED RODS AND NUTS USED IN WINGWALL CONNECTIONS SHALL BE MECHANICALLY ZINC COATED IN ACCORDANCE WITH ASTM B695 CLASS 50.
      3.3.2. STRUCTURAL STEEL FOR WINGWALL CONNECTION PLATES AND PLATE WASHERS SHALL CONFORM TO AASHTO M 270 (ASTM A 709) GRADE 36 AND SHALL BE HOT DIP GALVANIZED AS PER AASHTO M111 (ASTM A123).
      3.3.3. INSERTS FOR WINGWALLS SHALL BE 1" DIAMETER TWO-BOLT PRESET WINGWALL ANCHORS AS MANUFACTURED BY DAYTON SUPERIOR CONCRETE ACCESSORIES, MIAMISBURG, OHIO, (800) 745-3700 AND SHALL BE MECHANICALLY ZINC COATED IN ACCORDANCE WITH ASTM B695 CLASS 50.
      3.3.4. FERRULE LOOP INSERTS SHALL BE F-64 FERRULE LOOP INSERTS AS MANUFACTURED BY DAYTON SUPERIOR CONCRETE ACCESSORIES, MIAMISBURG, OHIO, (800) 745-3700.
      3.3.5. HOOK BOLTS USED IN ATTACHED HEADWALL CONNECTIONS SHALL BE ASTM A307.
      3.3.6. INSERTS FOR DETACHED HEADWALL CONNECTIONS SHALL BE AISI TYPE 304 STAINLESS STEEL, EXPANDED COIL INSERTS AS MANUFACTURED BY DAYTON SUPERIOR CONCRETE ACCESSORIES, MIAMISBURG, OHIO, (800) 745-3700. COIL RODS AND NUTS USED IN HEADWALL CONNECTIONS SHALL BE AISI TYPE 304 STAINLESS STEEL. WASHERS USED IN HEADWALL CONNECTIONS SHALL BE EITHER AISI TYPE 304 STAINLESS STEEL PLATE WASHERS OR AASHTO M270 (ASTM A709) GRADE 36 PLATE WASHERS HOT DIP GALVANIZED AS PER AASHTO M111 (ASTM A123).
      3.3.7. MECHANICAL SPLICES OF REINFORCING BARS SHALL BE MADE USING THE DOWEL BAR SPLICER SYSTEM AS MANUFACTURED BY DAYTON SUPERIOR CONCRETE ACCESSORIES, MIAMISBURG, OHIO, (800) 745-3700, AND SHALL CONSIST OF THE DOWEL BAR SPLICER (DB-SAE) AND DOWEL-IN (DI).

4. MANUFACTURE OF PRECAST ELEMENTS - SUBJECT TO THE PROVISIONS OF SECTION 5, BELOW, THE PRECAST ELEMENT DIMENSION AND REINFORCEMENT DETAILS SHALL BE AS PRESCRIBED IN THE PLAN AND SHOP DRAWINGS PROVIDED BY THE MANUFACTURER.
   4.1. FORMS - THE FORMS USED IN MANUFACTURE SHALL BE SUFFICIENTLY RIGID AND ACCURATE TO MAINTAIN THE REQUIRED PRECAST ELEMENT DIMENSIONS WITHIN THE PERMISSIBLE VARIATIONS GIVEN IN SECTION 5 OF THESE SPECIFICATIONS. ALL CASTING SURFACES SHALL BE OF A SMOOTH MATERIAL.
   4.2. PLACEMENT OF REINFORCEMENT
      4.2.1. PLACEMENT OF REINFORCEMENT IN PRECAST BRIDGE UNITS - THE COVER OF CONCRETE OVER THE OUTSIDE CIRCUMFERENTIAL REINFORCEMENT SHALL BE 2" MINIMUM. THE COVER OF CONCRETE OVER THE INSIDE CIRCUMFERENTIAL REINFORCEMENT SHALL BE 1½" MINIMUM, UNLESS OTHERWISE NOTED ON THE SHOP DRAWINGS. THE CLEAR DISTANCE OF THE END CIRCUMFERENTIAL WIRES SHALL NOT BE LESS THAN 1" NOR MORE THAN 2" FROM THE ENDS OF EACH SECTION. REINFORCEMENT SHALL BE ASSEMBLED UTILIZING SINGLE OR MULTIPLE LAYERS OF WELDED WIRE FABRIC (NOT TO EXCEED 3 LAYERS), SUPPLEMENTED WITH A SINGLE LAYER OF DEFORMED BILLET-STEEL BARS, WHEN NECESSARY. WELDED WIRE FABRIC SHALL BE COMPOSED OF CIRCUMFERENTIAL AND LONGITUDINAL WIRES MEETING THE SPACING REQUIREMENTS OF 4.3, BELOW, AND SHALL CONTAIN SUFFICIENT LONGITUDINAL WIRES EXTENDING THROUGH THE BRIDGE UNIT TO MAINTAIN THE SHAPE AND POSITION OF THE REINFORCEMENT. LONGITUDINAL DISTRIBUTION REINFORCEMENT MAY BE WELDED WIRE FABRIC OR DEFORMED BILLET-STEEL BARS AND SHALL MEET THE SPACING REQUIREMENTS OF 4.3, BELOW. THE ENDS OF THE LONGITUDINAL DISTRIBUTION REINFORCEMENT SHALL BE NOT MORE THAN 3" AND NOT LESS THAN 1½" FROM THE ENDS OF THE BRIDGE UNIT.
      4.2.2. BENDING OF REINFORCEMENT FOR PRECAST BRIDGE UNITS - THE OUTSIDE AND INSIDE CIRCUMFERENTIAL REINFORCING STEEL FOR THE CORNERS OF THE BRIDGE SHALL BE BENT TO SUCH AN ANGLE THAT IS APPROXIMATELY EQUAL TO THE CONFIGURATION OF THE BRIDGE'S OUTSIDE CORNER.
      4.2.3. PLACEMENT OF REINFORCEMENT FOR PRECAST WINGWALLS AND HEADWALLS - THE COVER OF CONCRETE OVER THE LONGITUDINAL AND TRANSVERSE REINFORCEMENT SHALL BE 2" MINIMUM. THE CLEAR DISTANCE FROM THE END OF EACH PRECAST ELEMENT TO THE END OF REINFORCING STEEL SHALL NOT BE LESS THAN 1½" NOR MORE THAN 3". REINFORCEMENT SHALL BE ASSEMBLED UTILIZING A SINGLE LAYER OF WELDED WIRE FABRIC, OR A SINGLE LAYER OF DEFORMED BILLET-STEEL BARS. WELDED WIRE FABRIC SHALL BE COMPOSED OF TRANSVERSE AND LONGITUDINAL WIRES MEETING THE SPACING REQUIREMENTS OF 4.3, BELOW, AND SHALL CONTAIN SUFFICIENT LONGITUDINAL WIRES EXTENDING THROUGH THE ELEMENT TO MAINTAIN THE SHAPE AND POSITION OF THE REINFORCEMENT. LONGITUDINAL REINFORCEMENT MAY BE WELDED WIRE FABRIC OR DEFORMED BILLET-STEEL BARS AND SHALL MEET THE SPACING REQUIREMENTS OF 4.3, BELOW.
      4.2.4. PLACEMENT OF REINFORCMENT FOR PRECAST FOUNDATION UNITS - THE COVER OF CONCRETE OVER THE BOTTOM REINFORCEMENT SHALL BE 3 INCHES MINIMUM. THE COVER OF CONCRETE FOR ALL OTHER REINFORCEMENT SHALL BE 2 INCHES MINIMUM. THE CLEAR DISTANCE FROM THE END OF EACH PRECAST ELEMENT TO THE END OF REINFORCING STEEL SHALL NOT BE LESS THAN 2 INCHES NOR MORE THAN 3 INCHES. REINFORCEMENT SHALL BE ASSEMBLED UTILIZING A SINGLE LAYER OF WELDED WIRE FABRIC OR A SINGLE LAYER OF DEFOREMED BILLET-STEEL BARS. WELDED WIRE FABRIC SHALL BE COMPOSED OF TRANSVERSE AND LONGITUDINAL WIRES MEETING THE SPACING REQUIREMENTS OF 4.3, BELOW, AND SHALL CONTAIN SUFFICIENT LONGITUDINAL WIRES EXTENDING THROUGH THE ELEMENT TO MAINTAIN THE SHAPE AND POSITION OF THE REINFORCEMENT. LONGITUDINAL REINFORCEMENT MAY BE WELDED WIRE FABRIC OR DEFORMED BILLET-STEEL BARS AND SHALL MEET THE SPACING REQUIREMENTS OF 4.3, BELOW.
   4.3. LAPS, WELDS, SPACING
      4.3.1. LAPS, WELDS, AND SPACING FOR PRECAST BRIDGE UNITS - TENSION SPLICES IN THE CIRCUMFERENTIAL REINFORCEMENT SHALL BE MADE BY LAPPING. LAPS MAY BE TACK WELDED TOGETHER FOR ASSEMBLY PURPOSES. FOR SMOOTH WELDED WIRE FABRIC, THE OVERLAP SHALL MEET THE REQUIREMENTS OF AASHTO 5.11.2.5.2 AND 5.11.6.2. FOR DEFORMED WELDED WIRE FABRIC, THE OVERLAP SHALL MEET THE REQUIREMENTS OF AASHTO 5.11.2.5.1 AND 5.11.6.1. THE OVERLAP OF WELDED WIRE FABRIC SHALL BE MEASURED BETWEEN THE OUTER-MOST LONGITUDINAL WIRES OF EACH FABRIC SHEET. FOR DEFORMED BILLET-STEEL BARS, THE OVERLAP SHALL MEET THE REQUIREMENTS OF AASHTO 5.11.2.1 FOR SPLICES OTHER THAN TENSION SPLICES, THE OVERLAP SHALL BE A MINIMUM OF 1'-0" FOR WELDED WIRE FABRIC OR DEFORMED BILLET-STEEL BARS. THE SPACING CENTER TO CENTER OF THE CIRCUMFERENTIAL WIRES IN A WIRE FABRIC SHEET SHALL BE NOT LESS THAN 2" NOR MORE THAN 4". THE SPACING CENTER TO CENTER OF THE LONGITUDINAL WIRES SHALL NOT BE MORE THAN 8". THE SPACING CENTER TO CENTER OF THE LONGITUDINAL DISTRIBUTION STEEL FOR EITHER LINE OF REINFORCING IN THE TOP SLAB SHALL BE NOT MORE THAN 1'-4".
      4.3.2. LAPS, WELDS, AND SPACING FOR PRECAST WINGWALLS, HEADWALLS AND FOUNDATIONS - SPLICES IN THE REINFORCEMENT SHALL BE MADE BY LAPPING. LAPS MAY BE TACK WELDED TOGETHER FOR ASSEMBLY PURPOSES. FOR SMOOTH WELDED WIRE FABRIC, THE OVERLAP SHALL MEET THE REQUIREMENTS OF AASHTO 5.11.2.5.2 AND 5.11.6.2. FOR DEFORMED WELDED WIRE FABRIC, THE OVERLAP SHALL MEET THE REQUIREMENTS OF AASHTO 5.11.2.5.1 AND 5.11.6.1. FOR DEFORMED BILLET-STEEL BARS, THE OVERLAP SHALL MEET THE REQUIREMENTS OF AASHTO 5.11.2.1. THE SPACING CENTER-TO-CENTER OF THE WIRES IN A WIRE FABRIC SHEET SHALL BE NOT LESS THAN 2" NOR MORE THAN 8".
   4.4. CURING - THE PRECAST CONCRETE ELEMENTS SHALL BE CURED FOR A SUFFICIENT LENGTH OF TIME SO THAT THE CONCRETE WILL DEVELOP THE SPECIFIED COMPRESSIVE STRENGTH IN 28 DAYS OR LESS. ANY ONE OF THE FOLLOWING METHODS OF CURING OR COMBINATIONS THEREOF SHALL BE USED:
      4.4.1. STEAM CURING - THE PRECAST ELEMENTS MAY BE LOW-PRESSURE STEAM CURED BY A SYSTEM THAT WILL MAINTAIN A MOIST ATMOSPHERE.
      4.4.2. WATER CURING - THE PRECAST ELEMENTS MAY BE WATER CURED BY ANY METHOD THAT WILL KEEP THE SECTIONS MOIST.
      4.4.3. MEMBRANE CURING - A SEALING MEMBRANE CONFORMING TO THE REQUIREMENTS OF ASTM SPECIFICATION C309 MAY BE APPLIED AND SHALL BE LEFT INTACT UNTIL THE REQUIRED CONCRETE COMPRESSIVE STRENGTH IS ATTAINED. THE CONCRETE TEMPERATURE AT THE TIME OF APPLICATION SHALL BE WITHIN +/- 10 DEGREES F OF THE ATMOSPHERIC TEMPERATURE. ALL SURFACES SHALL BE KEPT MOIST PRIOR TO THE APPLICATION OF THE COMPOUNDS AND SHALL BE DAMP WHEN THE COMPOUND IS APPLIED.
   4.5. STORAGE, HANDLING & DELIVERY
      4.5.1. STORAGE - PRECAST CONCRETE BRIDGE ELEMENTS SHALL BE LIFTED AND STORED IN "AS-CAST" POSITION. PRECAST CONCRETE HEADWALL AND WINGWALL UNITS ARE CAST, STORED AND SHIPPED IN A FLAT POSITION. THE PRECAST ELEMENTS SHALL BE STORED IN SUCH A MANNER TO PREVENT CRACKING OR DAMAGE. STORE ELEMENTS USING TIMBER SUPPORTS AS APPROPRIATE. THE UNITS SHALL NOT BE MOVED UNTIL THE CONCRETE COMPRESSIVE STRENGTH HAS REACHED A MINIMUM OF 2500 PSI, AND THEY SHALL NOT BE STORED IN AN UPRIGHT POSITION.
      4.5.2. HANDLING - HANDLING DEVICES SHALL BE PERMITTED IN EACH PRECAST ELEMENT FOR THE PURPOSE OF HANDLING AND SETTING. SPREADER BEAMS MAY BE REQUIRED FOR THE LIFTING OF PRECAST CONCRETE BRIDGE ELEMENTS TO PRECLUDE DAMAGE FROM BENDING OR TORSION FORCES.
      4.5.3. DELIVERY - PRECAST CONCRETE ELEMENTS MUST NOT BE SHIPPED UNTIL THE CONCRETE HAS ATTAINED THE SPECIFIED DESIGN COMPRESSIVE STRENGTH, OR AS DIRECTED BY THE DESIGN ENGINEER. PRECAST CONCRETE ELEMENTS MAY BE UNLOADED AND PLACED ON THE GROUND AT THE SITE UNTIL INSTALLED. STORE ELEMENTS USING TIMBER SUPPORTS AS APPROPRIATE.
   4.6. QUALITY ASSURANCE - THE PRECASTER SHALL DEMONSTRATE ADHERENCE TO THE STANDARDS SET FORTH IN THE NPCA QUALITY CONTROL MANUAL. THE PRECASTER SHALL MEET EITHER SECTION 4.6.1 OR 4.6.2
      4.6.1. CERTIFICATION - THE PRECASTER SHALL BE CERTIFIED BY THE PRECAST/PRESTRESSED CONCRETE INSTITUTE PLANT CERTIFICATION PROGRAM OR THE NATIONAL PRECAST CONCRETE ASSOCIATION'S PLANT CERTIFICATION PROGRAM PRIOR TO AND DURING PRODUCTION OF THE PRODUCTS COVERED BY THIS SPECIFICATION.
      4.6.2. QUALIFICATIONS, TESTING AND INSPECTION
         4.6.2.1. THE PRECASTER SHALL HAVE BEEN IN THE BUSINESS OF PRODUCING PRECAST CONCRETE PRODUCTS SIMILAR TO THOSE SPECIFIED FOR A MINIMUM OF THREE YEARS. HE SHALL MAINTAIN A PERMANENT QUALITY CONTROL DEPARTMENT OR RETAIN AN INDEPENDENT TESTING AGENCY ON A CONTINUING BASIS. THE AGENCY SHALL ISSUE A REPORT, CERTIFIED BY A LICENSED ENGINEER, DETAILING THE ABILITY OF THE PRECASTER TO PRODUCE QUALITY PRODUCTS CONSISTENT WITH INDUSTRY STANDARDS.
         4.6.2.2. THE PRECASTER SHALL SHOW THAT THE FOLLOWING TESTS ARE PERFORMED IN ACCORDANCE WITH THE ASTM STANDARDS INDICATED. TESTS SHALL BE PERFORMED AS INDICATED IN SECTION 6 OF THESE SPECIFICATIONS.
            4.6.2.2.1. AIR CONTENT: C231 OR C173
            4.6.2.2.2. COMPRESSIVE STRENGTH: C31,C39,C497
         4.6.2.3. THE PRECASTER SHALL PROVIDE DOCUMENTATION DEMONSTRATING COMPLIANCE WITH THIS SECTION OF CONTECH® ENGINEERED SOLUTIONS AT REGULAR INTERVALS OR UPON REQUEST.
         4.6.2.4. THE OWNER MAY PLACE AN INSPECTOR IN THE PLANT WHEN THE PRODUCTS COVERED BY THIS SPECIFICATION ARE BEING MANUFACTURED.
      4.6.3. DOCUMENTATION - THE PRECASTER SHALL SUBMIT PRECAST PRODUCTION REPORTS TO CONTECH® ENGINEERED SOLUTIONS AS REQUIRED.

5. PERMISSIBLE VARIATIONS
   5.1. BRIDGE UNITS
      5.1.1. INTERNAL DIMENSIONS - THE INTERNAL DIMENSION SHALL VARY NOT MORE THAN 1% FROM THE DESIGN DIMENSIONS NOR MORE THAN 1½" WHICHEVER IS LESS.
      5.1.2. SLAB AND WALL THICKNESS - THE SLAB AND WALL THICKNESS SHALL NOT BE LESS THAN THAT SHOWN IN THE DESIGN BY MORE THAN ¼". A THICKNESS MORE THAN THAT REQUIRED IN THE DESIGN SHALL NOT BE CAUSE FOR REJECTION.
      5.1.3. LENGTH OF OPPOSITE SURFACES - VARIATIONS IN LAYING LENGTHS OF TWO OPPOSITE SURFACES OF THE BRIDGE UNIT SHALL NOT BE MORE THAN ½" IN ANY SECTION, EXCEPT WHERE BEVELED ENDS FOR LAYING OF CURVES ARE SPECIFIED BY THE PURCHASER.
      5.1.4. LENGTH OF SECTION - THE UNDERRUN IN LENGTH OF A SECTION SHALL NOT BE MORE THAN ½" IN ANY BRIDGE UNIT.
      5.1.5. POSITION OF REINFORCEMENT - THE MAXIMUM VARIATION IN POSITION OF THE REINFORCEMENT SHALL BE ± ½". IN NO CASE SHALL THE COVER OVER THE REINFORCEMENT BE LESS THAN 1½" FOR THE OUTSIDE CIRCUMFERENTIAL STEEL OR BE LESS THAN 1" FOR THE INSIDE CIRCUMFERENTIAL STEEL AS MEASURED TO THE EXTERNAL OR INTERNAL SURFACE OF THE BRIDGE. THESE TOLERANCES OR COVER REQUIREMENTS DO NOT APPLY TO MATING SURFACES OF THE JOINTS.
      5.1.6. AREA OF REINFORCEMENT - THE AREAS OF STEEL REINFORCEMENT SHALL BE THE DESIGN STEEL AREAS AS SHOWN IN THE MANUFACTURER'S SHOP DRAWINGS. STEEL AREAS GREATER THAN THOSE REQUIRED SHALL NOT BE CAUSE FOR REJECTION. THE PERMISSIBLE VARIATION IN DIAMETER OF ANY REINFORCEMENT SHALL CONFORM TO THE TOLERANCES PRESCRIBED IN THE ASTM SPECIFICATION FOR THAT TYPE OF REINFORCEMENT.
   5.2. WINGWALLS & HEADWALLS
      5.2.1. WALL THICKNESS - THE WALL THICKNESS SHALL NOT VARY FROM THAT SHOWN IN THE DESIGN BY MORE THAN ½".
      5.2.2. LENGTH/HEIGHT OF WALL SECTIONS - THE LENGTH AND HEIGHT OF THE WALL SHALL NOT VARY FROM THAT SHOWN IN THE DESIGN BY MORE THAN ½".
      5.2.3. POSITION OF REINFORCEMENT - THE MAXIMUM VARIATION IN THE POSITION OF THE REINFORCEMENT SHALL BE ± ½". IN NO CASE SHALL THE COVER OVER THE REINFORCEMENT BE LESS THAN 1½".
      5.2.4. SIZE OF REINFORCEMENT - THE PERMISSIBLE VARIATION IN DIAMETER OF ANY REINFORCING SHALL CONFORM TO THE TOLERANCES PRESCRIBED IN THE ASTM SPECIFICATION FOR THAT TYPE OF REINFORCING. STEEL AREA GREATER THAN THAT REQUIRED SHALL NOT BE CAUSE FOR REJECTION.
   5.3. FOUNDATION UNITS
      5.3.1. WALL THICKNESS - THE WALL THICKNESS SHALL NOT VARY FROM THAT SHOWN IN THE DESIGN BY MORE THAN ½".
      5.3.2. LENGTH/ HEIGHT/WIDTH OF FOUNDATION SECTIONS - THE LENGTH, HEIGHT AND WIDTH OF THE FOUNDATION UNITS SHALL NOT VARY FROM THAT SHOWN IN THE DESIGN BY MORE THAN ½".
      5.3.3. POSITION OF REINFORCEMENT - THE MAXIMUM VARIATION IN THE POSITION OF THE REINFORCEMENT SHALL BE ± ½". IN NO CASE SHALL THE COVER OVER THE REINFORCEMENT BE LESS THAN 1½".
      5.3.4. SIZE OF REINFORCEMENT - THE PERMISSIBLE VARIATION IN DIAMETER OF ANY REINFORCING SHALL CONFORM TO THE TOLERANCES PRESCRIBED IN THE ASTM SPECIFICATION FOR THAT TYPE OF REINFORCING. STEEL AREA GREATER THAN THAT REQUIRED SHALL NOT BE CAUSE FOR REJECTION.

6. TESTING/ INSPECTION
   6.1. TESTING
      6.1.1. TYPE OF TEST SPECIMEN - CONCRETE COMPRESSIVE STRENGTH SHALL BE DETERMINED FROM COMPRESSION TESTS MADE ON CYLINDERS OR CORES. FOR CYLINDER TESTING, A MINIMUM OF 4 CYLINDERS SHALL BE TAKEN FOR EACH BRIDGE ELEMENT. EACH ELEMENT SHALL BE CONSIDERED SEPARATELY FOR THE PURPOSE OF TESTING AND ACCEPTANCE.
      6.1.2. COMPRESSION TESTING - CYLINDERS SHALL BE MADE AND TESTED AS PRESCRIBED BY THE ASTM C39 SPECIFICATION. CYLINDERS SHALL BE CURED IN THE SAME ENVIRONMENT AS THE BRIDGE ELEMENTS. CORES SHALL BE OBTAINED AND TESTED FOR COMPRESSIVE STRENGTH IN ACCORDANCE WITH THE PROVISIONS OF THE ASTM C42 SPECIFICATION.
      6.1.3. ACCEPTABILITY OF CYLINDER TESTS - WHEN THE AVERAGE COMPRESSIVE STRENGTH OF ALL CYLINDERS TESTED IS EQUAL TO OR GREATER THAN THE DESIGN COMPRESSIVE STRENGTH, AND NOT MORE THAN 10% OF THE CYLINDERS TESTED HAVE A COMPRESSIVE STRENGTH LESS THAN THE DESIGN CONCRETE STRENGTH, AND NO CYLINDER TESTED HAS A COMPRESSIVE STRENGTH LESS THAN 80% OF THE DESIGN COMPRESSIVE STRENGTH, THEN THE ELEMENT SHALL BE ACCEPTED. WHEN THE COMPRESSIVE STRENGTH OF THE CYLINDERS TESTED DOES NOT CONFORM TO THESE ACCEPTANCE CRITERIA, THE ACCEPTABILITY OF THE ELEMENT MAY BE DETERMINED AS DESCRIBED IN SECTION 6.1.4, BELOW.
      6.1.4. ACCEPTABILITY OF CORE TESTS - THE COMPRESSIVE STRENGTH OF THE CONCRETE IN A BRIDGE ELEMENT IS ACCEPTABLE WHEN THE AVERAGE CORE TEST STRENGTH IS EQUAL TO OR GREATER THAN THE DESIGN CONCRETE STRENGTH. WHEN THE COMPRESSIVE STRENGTH OF A CORE TESTED IS LESS THAN THE DESIGN CONCRETE STRENGTH, THE PRECAST ELEMENT FROM WHICH THAT CORE WAS TAKEN MAY BE RE-CORED. WHEN THE COMPRESSIVE STRENGTH OF THE RE-CORE IS EQUAL TO OR GREATER THAN THE DESIGN CONCRETE STRENGTH, THE COMPRESSIVE STRENGTH OF THE CONCRETE IN THAT BRIDGE ELEMENT IS ACCEPTABLE.
         6.1.4.1. WHEN THE COMPRESSIVE STRENGTH OF ANY RECORE IS LESS THAN THE DESIGN CONCRETE STRENGTH, THE PRECAST ELEMENT FROM WHICH THAT CORE WAS TAKEN SHALL BE REJECTED.
         6.1.4.2. PLUGGING CORE HOLES - THE CORE HOLES SHALL BE PLUGGED AND SEALED BY THE MANUFACTURER IN A MANNER SUCH THAT THE ELEMENTS WILL MEET ALL OF THE TEST REQUIREMENTS OF THIS SPECIFICATION. PRECAST ELEMENTS SO SEALED SHALL BE CONSIDERED SATISFACTORY FOR USE.
         6.1.4.3. TEST EQUIPMENT - EVERY MANUFACTURER FURNISHING PRECAST ELEMENTS UNDER THIS SPECIFICATION SHALL FURNISH ALL FACILITIES AND PERSONNEL NECESSARY TO CARRY OUT THE TEST REQUIRED.
   6.2. INSPECTION - THE QUALITY OF MATERIALS, THE PROCESS OF MANUFACTURE, AND THE FINISHED PRECAST ELEMENTS SHALL BE SUBJECT TO INSPECTION BY THE PURCHASER.

7. JOINTS
   THE BRIDGE UNITS SHALL BE PRODUCED WITH FLAT BUTT ENDS. THE ENDS OF THE BRIDGE UNITS SHALL BE SUCH THAT WHEN THE SECTIONS ARE LAID TOGETHER THEY WILL MAKE A CONTINUOUS LINE WITH A SMOOTH INTERIOR FREE OF APPRECIABLE IRREGULARITIES, ALL COMPATIBLE WITH THE PERMISSIBLE VARIATIONS IN SECTION 5, ABOVE. THE JOINT WIDTH BETWEEN ADJACENT PRECAST UNITS SHALL NOT EXCEED ¾".

8. WORKMANSHIP/ FINISH
   THE BRIDGE UNITS, WINGWALLS, HEADWALLS AND FOUNDATION UNITS SHALL BE SUBSTANTIALLY FREE OF FRACTURES. THE ENDS OF THE BRIDGE UNITS SHALL BE NORMAL TO THE WALLS AND CENTERLINE OF THE BRIDGE SECTION, WITHIN THE LIMITS OF THE VARIATIONS GIVEN IN SECTION 5, ABOVE, EXCEPT WHERE BEVELED ENDS ARE SPECIFIED. THE FACES OF THE WINGWALLS AND HEADWALLS SHALL BE PARALLEL TO EACH OTHER, WITHIN THE LIMITS OF VARIATIONS GIVEN IN SECTION 5, ABOVE. THE SURFACE OF THE PRECAST ELEMENTS SHALL BE A SMOOTH STEEL FORM OR TROWELED SURFACE. TRAPPED AIR POCKETS CAUSING SURFACE DEFECTS SHALL BE CONSIDERED AS PART OF A SMOOTH, STEEL FORM FINISH.

9. REPAIRS
   PRECAST ELEMENTS MAY BE REPAIRED, IF NECESSARY, BECAUSE OF IMPERFECTIONS IN MANUFACTURE OR HANDLING DAMAGE AND WILL BE ACCEPTABLE IF, IN THE OPINION OF THE PURCHASER, THE REPAIRS ARE SOUND, PROPERLY FINISHED AND CURED, AND THE REPAIRED SECTION CONFORMS TO THE REQUIREMENTS OF THIS SPECIFICATION.

10. REJECTION
   THE PRECAST ELEMENTS SHALL BE SUBJECT TO REJECTION ON ACCOUNT OF ANY OF THE SPECIFICATION REQUIREMENTS. INDIVIDUAL PRECAST ELEMENTS MAY BE REJECTED BECAUSE OF ANY OF THE FOLLOWING:
   10.1. FRACTURES OR CRACKS PASSING THROUGH THE WALL, EXCEPT FOR A SINGLE END CRACK THAT DOES NOT EXCEED ONE HALF THE THICKNESS OF THE WALL.
   10.2. DEFECTS THAT INDICATE PROPORTIONING, MIXING, AND MOLDING NOT IN COMPLIANCE WITH SECTION 4 OF THESE SPECIFICATIONS.
   10.3. HONEYCOMBED OR OPEN TEXTURE.
   10.4. DAMAGED ENDS, WHERE SUCH DAMAGE WOULD PREVENT MAKING A SATISFACTORY JOINT.

4/15/16

COMMONWEALTH OF MASSACHUSETTS
PHILIP A. CREAMER
CIVIL
NO. 48747
REGISTERED PROFESSIONAL ENGINEER

The design and information shown on this drawing is provided as a service to the project owner, engineer and contractor by Contech Engineered Solutions LLC ("Contech"). Neither this drawing, nor any part thereof, may be used, reproduced or modified in any manner without the prior written consent of Contech. Failure to comply is done at the user's own risk and Contech expressly disclaims any liability or responsibility for such use.

If discrepancies between the supplied information upon which the drawing is based and actual field conditions are encountered as site work progresses, these discrepancies must be reported to Contech immediately for re-evaluation of the design. Contech accepts no liability for designs based on missing, incomplete or inaccurate information supplied by others.

MARK	DATE	REVISION DESCRIPTION	BY
3	4/5/2016	CHANGES PER REVIEW COMMENTS	RJS
2	2/3/2016	NO CHANGES THIS SHEET	JDR
1	1/13/2016	NO CHANGES THIS SHEET	JDR

CONTECH® ENGINEERED SOLUTIONS LLC
www.ContechES.com
9025 Centre Pointe Dr., Suite 400, West Chester, OH 45069
800-338-1122 513-645-7000 513-645-7993 FAX

CON/SPAN® BRIDGE SYSTEMS
EXPRESS Foundations
CONTRACT DRAWING

ROUTE 40
KEYES BROOK CULVERT
GROTON ROAD
WESTFORD, MASSACHUSETTS

PROJECT No.: 460045	SEQ. No.: 001	DATE: 2/19/2015
DESIGNED: JDR	DRAWN: DLB	
CHECKED: EMW	APPROVED: PAC	
SHEET NO.: CT7 OF CT8		

\\AD.CONTECH-CPI.COM\ROOT\MERLIN\PROJECT\ACTIVE\460000\460045\460045-1-CON_SPAN\DRAWINGS\CONTRACT\PRE-460045-010-CB-CON-C.DWG 4/5/2016 4:02 PM

SPECIFICATIONS FOR MANUFACTURE AND INSTALLATION OF CON/SPAN® BRIDGE SYSTEMS (CONT'D)

11. MARKING
EACH BRIDGE UNIT SHALL BE CLEARLY MARKED BY WATERPROOF PAINT. THE FOLLOWING SHALL BE SHOWN ON THE INSIDE OF THE VERTICAL LEG OF THE BRIDGE SECTION:
BRIDGE SPAN x BRIDGE RISE
DATE OF MANUFACTURE
NAME OR TRADEMARK OF THE MANUFACTURER

12. INSTALLATION PREPARATION
TO ENSURE CORRECT INSTALLATION OF THE PRECAST CONCRETE BRIDGE SYSTEM, CARE AND CAUTION MUST BE EXERCISED IN FORMING THE SUPPORT AREAS FOR BRIDGE UNITS, HEADWALL, AND WINGWALL ELEMENTS. EXERCISING SPECIAL CARE WILL FACILITATE THE RAPID INSTALLATION OF THE PRECAST COMPONENTS.

12.1. FOOTINGS
DO NOT OVER EXCAVATE FOUNDATIONS UNLESS DIRECTED BY SITE SOIL ENGINEER TO REMOVE UNSUITABLE SOIL.

THE SITE SOILS ENGINEER SHALL CERTIFY THAT THE BEARING CAPACITY MEETS OR EXCEEDS THE FOOTING DESIGN REQUIREMENTS, PRIOR TO THE CONTRACTOR POURING OF THE FOOTINGS.

THE BRIDGE UNITS AND WINGWALLS SHALL BE INSTALLED ON EITHER PRECAST OR CAST-IN-PLACE CONCRETE FOOTINGS. THE SIZE AND ELEVATION OF THE FOOTINGS SHALL BE AS DESIGNED BY THE ENGINEER. A KEYWAY SHALL BE FORMED IN THE TOP SURFACE OF THE BRIDGE FOOTING AS SPECIFIED ON THE PLANS. NO KEYWAY IS REQUIRED IN THE WINGWALL FOOTINGS, UNLESS OTHERWISE SPECIFIED ON THE PLANS.

THE FOOTINGS SHALL BE GIVEN A SMOOTH FLOAT FINISH AND SHALL REACH A COMPRESSIVE STRENGTH OF 2,000 PSI BEFORE PLACEMENT OF THE BRIDGE AND WINGWALL ELEMENTS. BACKFILLING SHALL NOT BEGIN UNTIL THE FOOTING HAS REACHED THE FULL DESIGN COMPRESSIVE STRENGTH.

THE FOOTING SURFACE SHALL BE CONSTRUCTED IN ACCORDANCE WITH GRADES SHOWN ON THE PLANS. WHEN TESTED WITH A 10'-0" STRAIGHT EDGE, THE SURFACE SHALL NOT VARY MORE THAN ¼" IN 10'-0".

IF A PRECAST CONCRETE FOOTING IS USED, THE CONTRACTOR SHALL PREPARE A 4" THICK BASE LAYER OF COMPACTED GRANULAR MATERIAL THE FULL WIDTH OF THE FOOTING PRIOR TO PLACING THE PRECAST FOOTING.

THE FOUNDATIONS FOR PRECAST CONCRETE BRIDGE ELEMENTS AND WINGWALLS MUST BE CONNECTED BY REINFORCEMENT TO FORM ONE MONOLITHIC BODY. EXPANSION JOINTS SHALL NOT BE USED.

THE CONTRACTOR SHALL BE RESPONSIBLE FOR THE CONSTRUCTION OF THE FOUNDATIONS PER THE PLANS AND SPECIFICATIONS.

13. INSTALLATION
13.1. GENERAL - THE INSTALLATION OF THE PRECAST CONCRETE ELEMENTS SHALL BE AS EXPLAINED IN THE PUBLICATION CON/SPAN BRIDGE SYSTEMS INSTALLATION HANDBOOK.
13.1.1. LIFTING - IT IS THE RESPONSIBILITY OF THE CONTRACTOR TO ENSURE THAT A CRANE OF THE CORRECT LIFTING CAPACITY IS AVAILABLE TO HANDLE THE PRECAST CONCRETE UNITS. THIS CAN BE ACCOMPLISHED BY USING THE WEIGHTS GIVEN FOR THE PRECAST CONCRETE COMPONENTS AND BY DETERMINING THE LIFTING REACH FOR EACH CRANE UNIT. SITE CONDITIONS MUST BE CHECKED WELL IN ADVANCE OF SHIPPING TO ENSURE PROPER CRANE LOCATION AND TO AVOID ANY LIFTING RESTRICTIONS. THE LIFT ANCHORS OR HOLES PROVIDED IN EACH UNIT ARE THE ONLY MEANS TO BE USED TO LIFT THE ELEMENTS. THE PRECAST CONCRETE ELEMENTS MUST NOT BE SUPPORTED OR RAISED BY OTHER MEANS THAN THOSE GIVEN IN THE MANUALS AND DRAWINGS WITHOUT WRITTEN APPROVAL FROM CONTECH® ENGINEERED SOLUTIONS.
13.1.2. CONSTRUCTION EQUIPMENT WEIGHT RESTRICTIONS - IN NO CASE SHALL EQUIPMENT OPERATING IN EXCESS OF THE DESIGN LOAD (HL-93) BE PERMITTED OVER THE BRIDGE UNITS UNLESS APPROVED BY CONTECH® ENGINEERED SOLUTIONS.
13.1.2.1. IN THE IMMEDIATE AREA OF THE BRIDGE UNITS, THE FOLLOWING RESTRICTIONS FOR THE USE OF HEAVY CONSTRUCTION MACHINERY DURING BACKFILLING OPERATIONS APPLY:
- NO CONSTRUCTION EQUIPMENT SHALL CROSS THE BARE PRECAST CONCRETE BRIDGE UNIT.
- AFTER THE COMPACTED FILL LEVEL HAS REACHED A MINIMUM OF 4" OVER THE CROWN OF THE BRIDGE, CONSTRUCTION EQUIPMENT WITH A WEIGHT OF LESS THAN 10 TONS MAY CROSS THE BRIDGE.
- AFTER THE COMPACTED FILL LEVEL HAS REACHED A MINIMUM OF 1'-0" OVER THE CROWN OF THE BRIDGE, CONSTRUCTION EQUIPMENT WITH A WEIGHT OF LESS THAN 30 TONS MAY CROSS THE BRIDGE.
- AFTER THE COMPACTED FILL LEVEL HAS REACHED THE DESIGN COVER, OR 2'-0" MINIMUM, OVER THE CROWN OF THE PRECAST CONCRETE BRIDGE, CONSTRUCTION EQUIPMENT WITHIN THE DESIGN LOAD LIMITS FOR THE ROAD MAY CROSS THE PRECAST CONCRETE BRIDGE.

13.2. LEVELING PAD/SHIMS - THE BRIDGE UNITS AND WINGWALLS SHALL BE SET ON HARDBOARD SHIMS CONFORMING TO ASTM D1037 OR PLASTIC SHIMS (DAYTON SUPERIOR P-80, P-81 OR APPROVED EQUAL) MEASURING 5" x 5", MINIMUM, UNLESS SHOWN OTHERWISE ON THE PLANS. A MINIMUM GAP OF ½" SHALL BE PROVIDED BETWEEN THE FOOTING AND THE BOTTOM OF THE BRIDGE'S VERTICAL LEGS OR THE BOTTOM OF THE WINGWALL. ALSO, A SUPPLY OF ¼", ½" AND ⅛" THICK HARDBOARD OR PLASTIC SHIMS FOR VARIOUS SHIMMING PURPOSES SHALL BE ON SITE.
13.3. PLACEMENT OF BRIDGE UNITS - THE BRIDGE UNITS SHALL BE PLACED AS SHOWN ON THE ENGINEER'S PLAN DRAWINGS. SPECIAL CARE SHALL BE TAKEN IN SETTING THE ELEMENTS TO THE TRUE LINE AND GRADE. THE JOINT WIDTH BETWEEN ADJACENT PRECAST UNITS SHALL NOT EXCEED ¾".

13.4. IT IS THE CONTRACTOR'S RESPONSIBILITY TO MAINTAIN THE STRUCTURE SPAN DURING ALL PHASES OF INSTALLATION. DUE TO THE ARCH SHAPE, BRIDGE ELEMENTS WILL TEND TO SPREAD UNDER SELF-WEIGHT. IT IS IMPERATIVE THAT ANY LATERAL SPREADING OF THE BRIDGE ELEMENTS BE AVOIDED DURING AND AFTER THEIR PLACEMENT. GENERALLY, HORIZONTAL CABLE TIES OR TIE RODS ARE SHIPPED IN THE LARGER BRIDGE ELEMENTS TO ASSIST IN PREVENTING THIS SPREADING. CABLE TIES/TIE RODS SHALL NOT BE REMOVED UNTILL BRIDGE UNITS ARE GROUTED AND GROUT HAS CURED. IT IS RECOMMENDED THAT TEMPORARY HARDWOOD BLOCKS BE USED IN CONJUNCTION WITH THE CABLE TIES/TIE RODS TO MAINTAIN SPAN. IF, HOWEVER, DUE TO SITE RESTRICTIONS, THESE CABLE TIES/TIE RODS MUST BE REMOVED PRIOR TO PLACEMENT OF THE BRIDGE ELEMANTS, THE CONTRACTOR MUST NOTIFY CONTECH (MANUFACTURER) AND REQUEST A SUGGESTED INSTALLATION PROCEDURE.

IN ADDITION, IF THE CABLE TIES/TIE RODS MUST BE REMOVED PRIOR TO SETTING ARCH UNITS, THE FOLLOWING QUALITY CONTROL PROCEDURE MUST BE FOLLOWED:
1) FIND "MEASURED SPAN" UPON ARCH UNIT'S DELIVERY TO SITE, PRIOR TO LIFTING FROM TRUCK AND REMOVING CABLE TIES/TIE RODS. "MEASURED SPAN" SHALL BE THE AVERAGE OF (3) SPAN MEASUREMENTS ALONG THE LAY LENGTH OF THE ARCH UNIT.
2) AFTER SETTING OF BRIDGE UNIT ON THE FOUNDATION, VERIFY THE SPAN. THIS "INSTALLED SPAN MEASUREMENT" SHALL NOT EXCEED THE MAXIMUM OF:
A) THE NOMINAL SPAN +½" OR
B) THE "MEASURED SPAN"
IF THE "INSTALLED SPAN MEASUREMENT" EXCEEDS THIS AMOUNT, THE ARCH UNIT SHALL BE LIFTED AND RE-SET UNTIL THE "INSTALLED SPAN MEASUREMENT" MEETS THE LIMITS.

13.5. PLACEMENT OF WINGWALLS, HEADWALLS AND FOUNDATION UNITS - THE WINGWALLS, HEADWALLS AND FOUNDATIONS SHALL BE PLACED AS SHOWN ON THE PLAN DRAWINGS. SPECIAL CARE SHALL BE TAKEN IN SETTING THE ELEMENTS TO THE TRUE LINE AND GRADE.
13.6. WATERPROOFING/JOINT PROTECTION AND SUBSURFACE DRAINAGE
13.6.1. EXTERNAL PROTECTION OF JOINTS - THE BUTT JOINT MADE BY TWO ADJOINING BRIDGE UNITS SHALL BE COVERED WITH A ⅞" x 1⅜" PREFORMED BITUMINOUS JOINT SEALANT AND A MINIMUM OF A 9" WIDE JOINT WRAP. THE SURFACE SHALL BE FREE OF DIRT BEFORE APPLYING THE JOINT MATERIAL. A PRIMER COMPATIBLE WITH THE JOINT WRAP TO BE USED SHALL BE APPLIED FOR A MINIMUM WIDTH OF 9" ON EACH SIDE OF THE JOINT. THE EXTERNAL WRAP SHALL BE CS212 BY CONCRETE SEALANTS INC., EZ-WRAP RUBBER BY PRESS-SEAL GASKET CORPORATION, SEAL WRAP BY MAR MAC MANUFACTURING CO. INC. OR APPROVED EQUAL. THE JOINT SHALL BE COVERED CONTINUOUSLY FROM THE BOTTOM OF ONE BRIDGE SECTION LEG, ACROSS THE TOP OF THE BRIDGE AND TO THE OPPOSITE BRIDGE SECTION LEG. ANY LAPS THAT RESULT IN THE JOINT WRAP SHALL BE A MINIMUM OF 6" LONG WITH THE OVERLAP RUNNING DOWNHILL.
13.6.2. IN ADDITION TO THE JOINTS BETWEEN BRIDGE UNITS, THE JOINT BETWEEN THE END BRIDGE UNIT AND THE HEADWALL SHALL ALSO BE SEALED AS DESCRIBED ABOVE. IF PRECAST WINGWALLS ARE USED, THE JOINT BETWEEN THE END BRIDGE UNIT AND THE WINGWALL SHALL BE SEALED WITH A 2'-0" STRIP OF FILTER FABRIC. ALSO, IF LIFT HOLES ARE FORMED IN THE BRIDGE UNITS, THEY SHALL BE PRIMED AND COVERED WITH A 9" x 9" SQUARE OF JOINT WRAP.
13.6.3. DURING THE BACKFILLING OPERATION, CARE SHALL BE TAKEN TO KEEP THE JOINT WRAP IN ITS PROPER LOCATION OVER THE JOINT.
13.6.4. SUBSOIL DRAINAGE SHALL BE AS DIRECTED BY THE ENGINEER.

13.7. GROUTING
13.7.1. GROUTING SHALL NOT BE PERFORMED WHEN TEMPERATURES ARE EXPECTED TO GO BELOW 35° FOR A PERIOD OF 72 HOURS. FILL THE BRIDGE-FOUNDATION KEYWAY WITH CEMENT GROUT (PORTLAND CEMENT AND WATER OR CEMENT MORTAR COMPOSED OF PORTLAND CEMENT, SAND AND WATER) WITH A MINIMUM 28-DAY COMPRESSIVE STRENGTH OF 3000 PSI. VIBRATE AS REQUIRED TO ENSURE THAT THE ENTIRE KEY AROUND THE BRIDGE ELEMENT IS COMPLETELY FILLED. IF BRIDGE ELEMENTS HAVE BEEN SET WITH TEMPORARY TIES (CABLES, BARS, ETC.) GROUT MUST ATTAIN A MINIMUM COMPRESSIVE STRENGTH OF 1500 PSI BEFORE TIES MAY BE REMOVED.
13.7.2. ALL GROUT SHALL HAVE A MAXIMUM AGGREGATE SIZE OF ¼".
13.7.3. LIFTING AND ERECTION ANCHOR RECESSES SHALL BE FILLED WITH GROUT.
13.7.4. AFTER GROUT HAS REACHED ITS DESIGN STRENGTH THE TEMPORARY HARDWOOD WEDGES SHALL BE REMOVED AND THEIR HOLES FILLED WITH GROUT.
13.8. BACKFILL
13.8.1. DO NOT PERFORM BACKFILLING DURING WET OR FREEZING WEATHER.
13.8.2. NO BACKFILL SHALL BE PLACED AGAINST ANY STRUCTURAL ELEMENTS UNTIL THEY HAVE BEEN APPROVED BY THE ENGINEER.
13.8.3. BACKFILL SHALL BE CONSIDERED AS ALL REPLACED EXCAVATION AND NEW EMBANKMENT ADJACENT TO THE PRECAST CONCRETE ELEMENTS. THE PROJECT CONSTRUCTION AND MATERIAL SPECIFICATIONS, WHICH INCLUDE THE SPECIFICATIONS FOR EXCAVATION FOR STRUCTURES AND ROADWAY EXCAVATION AND EMBANKMENT CONSTRUCTION, SHALL APPLY EXCEPT AS MODIFIED IN THIS SECTION.
13.8.4. BACKFILL ZONES:
- IN-SITU SOIL
- ZONE A: CONSTRUCTED EMBANKMENT OR OVERFILL.
- ZONE B: FILL THAT IS DIRECTLY ASSOCIATED WITH PRECAST CONCRETE BRIDGE INSTALLATION.
- ZONE C: ROAD STRUCTURE.

13.8.5. REQUIRED BACKFILL PROPERTIES
13.8.5.1. IN-SITU SOIL - NATURAL GROUND IS TO BE SUFFICIENTLY STABLE TO ALLOW EFFECTIVE SUPPORT TO THE PRECAST CONCRETE BRIDGE UNITS. AS A GUIDE, THE EXISTING NATURAL GROUND SHOULD BE OF SIMILAR QUALITY AND DENSITY TO ZONE B MATERIAL FOR MINIMUM LATERAL DIMENSION OF ONE BRIDGE SPAN OUTSIDE OF THE BRIDGE FOOTING.
13.8.5.2. ZONE A - ZONE A REQUIRES FILL MATERIAL WITH SPECIFICATIONS AND COMPACTING PROCEDURES EQUAL TO THAT FOR NORMAL ROAD EMBANKMENTS.
13.8.5.3. ZONE B - GENERALLY, SOILS SHALL BE REASONABLY FREE OF ORGANIC MATTER, AND, NEAR CONCRETE SURFACES, FREE OF STONES LARGER THAN 3" IN DIAMETER. SEE CHARTS FOR DETAILED DESCRIPTIONS OF ACCEPTABLE SOILS.
13.8.5.4. ZONE C - ZONE C IS THE ROAD SECTION OF GRAVEL, ASPHALT OR CONCRETE BUILT IN COMPLIANCE WITH LOCAL ENGINEERING PRACTICES.
13.8.5.5. GEOTECHNICAL ENGINEER SHALL REVIEW GRADATIONS OF ALL INTERFACING MATERIALS AND, IF NECESSARY, RECOMMEND GEOTEXTILE FILTER FABRIC (PROVIDED BY CONTRACTOR)

13.8.6. PLACING AND COMPACTING BACKFILL
DUMPING FOR BACKFILLING IS NOT ALLOWED ANY NEARER THAN 3'-0" FROM THE BRIDGE LEG.

THE FILL MUST BE PLACED AND COMPACTED IN LAYERS NOT EXCEEDING 8". THE MAXIMUM DIFFERENCE IN THE SURFACE LEVELS OF THE FILL ON OPPOSITE SIDES OF THE BRIDGE MUST NOT EXCEED 2'-0".

THE FILL BEHIND WINGWALLS MUST BE PLACED AT THE SAME TIME AS THAT OF THE BRIDGE FILL. IT MUST BE PLACED IN PROGRESSIVELY PLACED HORIZONTAL LAYERS NOT EXCEEDING 8" PER LAYER.

THE BACKFILL OF ZONE B SHALL BE COMPACTED TO A MINIMUM DENSITY OF 95% OF THE STANDARD PROCTOR, AS REQUIRED BY AASHTO T-99.

SOIL WITHIN 1'-0" OF CONCRETE SURFACES SHALL BE HAND-COMPACTED. ELSEWHERE, USE OF ROLLERS IS ACCEPTABLE. IF VIBRATING ROLLER-COMPACTORS ARE USED, THEY SHALL NOT BE STARTED OR STOPPED WITHIN ZONE B AND THE VIBRATION FREQUENCY SHOULD BE AT LEAST 30 REVOLUTIONS PER SECOND.

THE BACKFILL MATERIAL AND COMPACTING BEHIND WINGWALLS SHALL SATISFY THE CRITERIA FOR THE BRIDGE BACKFILL, ZONE B.

BACKFILL AGAINST A WATERPROOFED SURFACE SHALL BE PLACED CAREFULLY TO AVOID DAMAGE TO THE WATERPROOFING MATERIAL.
13.8.7. BRIDGE UNITS
FOR FILL HEIGHTS OVER 12 FEET (AS MEASURED FROM TOP CROWN OF BRIDGE TO FINISHED GRADE), NO BACKFILLING MAY BEGIN UNTIL A BACKFILL COMPACTION TESTING PLAN HAS BEEN COORDINATED WITH AND APPROVED BY CONTECH® ENGINEERED SOLUTIONS.
13.8.8. WINGWALLS
BACKFILL IN FRONT OF WINGWALLS SHALL BE CARRIED TO GROUND LINES SHOWN IN THE PLANS.
13.8.9. MONITORING
THE CONTRACTOR SHALL CHECK SETTLEMENTS AND HORIZONTAL DISPLACEMENT OF FOUNDATION TO ENSURE THAT THEY ARE WITHIN THE ALLOWABLE LIMIT PROVIDED BY THE ENGINEER. THESE MEASUREMENTS SHOULD GIVE AN INDICATION OF THE SETTLEMENTS AND DEFORMATIONS ALONG THE LENGTH OF THE FOUNDATIONS.

THE FIRST MEASUREMENT SHOULD TAKE PLACE AFTER THE ERECTION OF ALL PRECAST BRIDGE SYSTEM ELEMENTS, A SECOND AFTER COMPLETION OF BACKFILLING, AND A THIRD BEFORE OPENING OF THE BRIDGE TO TRAFFIC. FURTHER MEASUREMENTS MAY BE MADE ACCORDING TO LOCAL CONDITIONS.

ACCEPTABLE SOILS FOR USE IN ZONE B BACKFILL

TYPICAL USCS MATERIALS	AASHTO GROUP	AASHTO SUBGROUP	PERCENT PASSING US SIEVE NO. #10	#40	#200	CHARACTER OF FRACTION PASSING NO. 40 SIEVE LIQUID LIMIT	PLASTICITY INDEX	SOIL DESRIPTION
GW, GP, SP	A1	A-1a	50 MAX	30 MAX	15 MAX		6 MAX	LARGELY GRAVEL BUT CAN INCLUDE SAND AND FINES
GM, SW, SP, SM		A-1b		50 MAX	25 MAX		6 MAX	GRAVELLY SAND OR GRADED SAND, MAY INCLUDE FINES
GM, SM, ML, SP, GP	A2	A-2-4			35 MAX	40 MAX	10 MAX	SANDS, GRAVELS WITH LOW-PLASTICITY SILT FINES
SC, GC, GM		A-2-5			35 MAX	41 MIN	10 MAX	SANDS, GRAVELS WITH PLASTIC SILT FINES
SP, SM, SW	A3			51 MIN	10 MAX		NON-PLASTIC	FINE SANDS
ML, SM, SC	A4				36 MIN	40 MAX	10 MAX	LOW-COMPRESSIBILTY SILTS

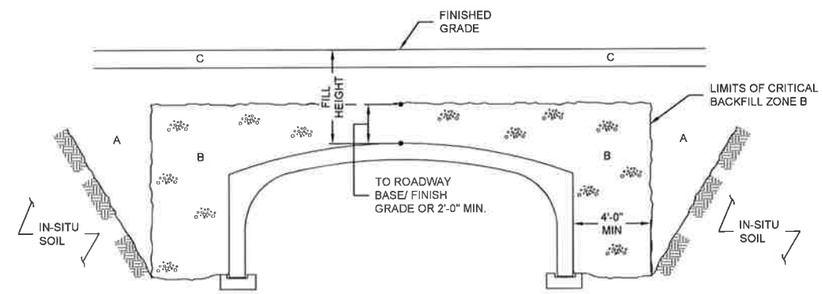

SPAN	FILL HEIGHT	ACCEPTABLE MATERIAL INSIDE ZONE B
≤ 24'-0"	≥ 12'-0"	A1, A3
≤ 24'-0"	< 12'-0"	A1, A2, A3, A4
> 24'-0"	ALL	A1, A3

BACKFILL REQUIREMENTS

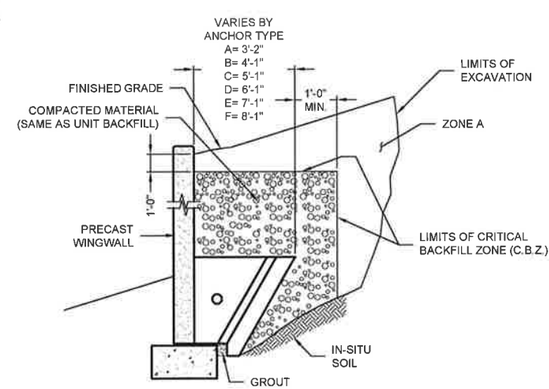

WALL BACKFILL REQUIREMENTS

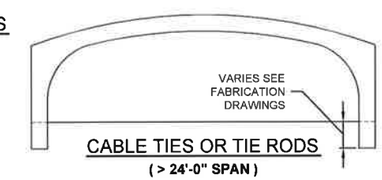

CABLE TIES OR TIE RODS
(> 24'-0" SPAN)

4/15/16
COMMONWEALTH OF MASSACHUSETTS
PHILIP A. CREAMER
CIVIL
NO. 48747
REGISTERED PROFESSIONAL ENGINEER

The design and information shown on this drawing is provided as a service to the project owner, engineer and contractor by Contech Engineered Solutions LLC ("Contech"). Neither this drawing, nor any part thereof, may be used, reproduced or modified in any manner without the prior written consent of Contech. Failure to comply is done at the user's own risk and Contech expressly disclaims any liability or responsibility for such use.

If discrepancies between the supplied information upon which the drawing is based and actual field conditions are encountered as site work progresses, these discrepancies must be reported to Contech immediately for re-evaluation of the design. Contech accepts no liability for designs based on missing, incomplete or inaccurate information supplied by others.

MARK	DATE	REVISION DESCRIPTION	BY
3	4/5/2016	CHANGES PER REVIEW COMMENTS	RJS
2	2/3/2016	NO CHANGES THIS SHEET	JDR
1	1/13/2016	NO CHANGES THIS SHEET	JDR

CONTECH® ENGINEERED SOLUTIONS LLC
www.ContechES.com
9025 Centre Pointe Dr., Suite 400, West Chester, OH 45069
800-338-1122 513-645-7000 513-645-7993 FAX

CON/SPAN® BRIDGE SYSTEMS
EXPRESS Foundations
CONTRACT DRAWING

ROUTE 40
KEYES BROOK CULVERT
GROTON ROAD
WESTFORD, MASSACHUSETTS

PROJECT No.: 460045	SEQ. No.: 001	DATE: 2/19/2015
DESIGNED: JDR		DRAWN: DLB
CHECKED: EMW		APPROVED: PAC
SHEET NO.: CT8 OF CT8		

\\AD.CONTECH-CPI.COM\ROOT\MERLIN\PROJECT\ACTIVE\460000\460045\460045-1-CON_SPAN\DRAWINGS\CONTRACT\PRE-460045-010-CB-CON-C.DWG 4/5/2016 4:02 PM