WESTFORD FIRE STATION

D&W PROJECT # 14-0690

65 Boston Road
Westford, MA 01886

DORE & WHITTIER ARCHITECTS, INC.

OWNER

TOWN OF WESTFORD
55 MAIN STREET
WESTFORD, MA 01886
P: 978.692.5500

ARCHITECT

260 MERRIMAC STREET
BUILDING 7, 2nd FLOOR
NEWBURYPORT, MA 01950
P: 978.499.2999
F: 978.499.2944

DORE & WHITTIER ARCHITECTS, INC.
212 BATTERY STREET
BURLINGTON, VT 05401
P: 802.863.1428
F: 802.863.6955

CIVIL ENGINEER / LANDSCAPE CONSULTANT

NITSCH ENGINEERING, INC.
2 CENTER PLAZA, SUITE 430
BOSTON, MA 02180
P: 617.338.0063
F: 617.338.6472

MEP ENGINEERS

GARCIA GALUSKA DeSOUSA, INC.
370 FAUNCE CORNER ROAD
DARTMOUTH, MA 01747-1217
P: 508.998.5700
F: 508.998.0883

STRUCTURAL ENGINEER

ENGINEERS DESIGN GROUP, INC.
10 CABOT ROAD, SUITE 210
MEDFORD, MA 02115
P: 781.396.9007
F: 781.396.9008

FOOD SERVICE

CRABTREE MCGRATH ASSOCIATES, INC.
161 WEST MAIN STREET
GEORGETOWN, MA 01833
P: 978.352.8500
F: 802.863.6955

SHEET NUMBER	SHEET NAME
CIVIL	
C.1	NOTES, LEGEND, & ABBREVIATIONS
C.2	EROSION & SEDIMENTATION CONTROL PLAN
C.3	SITE LAYOUT PLAN
C.4	SITE GRADING PLAN
C.5	SITE UTILITY PLAN
C.6	EROSION CONTROL DETAILS
C.7	SITE AND UTILITY DETAILS
C.8	SITE AND SEPTIC DETAILS
ARCHITECTURAL	
AG0.01	ABBREVIATIONS SYMBOLS MATERIALS & LEGEND
AG0.02	WALL TYPES, NOTES & DETAILS
A1.10	LEVEL 1 OVERALL PLAN
A1.20	LEVEL 2 OVERALL PLAN
A1.50	PLAN DETAILS
A3.10	ROOF PLAN
A4.10	OVERALL EXTERIOR ELEVATIONS
A4.11	OVERALL EXTERIOR ELEVATIONS
A5.10	BUILDING SECTIONS
A5.11	BUILDING SECTIONS
A7.01	STAIR & ELEVATOR PLANS & SECTIONS

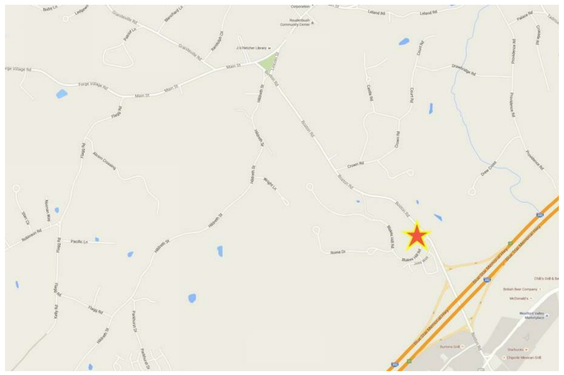

SCHEMATIC DESIGN PRICING SET 11/20/15

GENERAL NOTES

1. TOPOGRAPHIC DATA, PROPERTY LINE INFORMATION, AND EXISTING SITE FEATURES WERE OBTAINED FROM A PLAN ENTITLED "EXISTING CONDITION PLAN, BOSTON ROAD FIRE STATION", PREPARED BY NITSCH ENGINEERING, INC.., DATED AUGUST 5, 2015.
2. THE LOCATIONS AND ELEVATIONS OF ALL EXISTING UTILITIES SHALL BE CONSIDERED APPROXIMATE AND MUST BE VERIFIED BY THE CONTRACTOR PRIOR TO ANY UTILITY CONNECTIONS OR CROSSINGS OF PROPOSED UTILITIES AND EXISTING UTILITIES. THE CONTRACTOR SHALL CONTACT THE RESPECTIVE UTILITY COMPANIES RELATIVE TO THE LOCATIONS AND ELEVATIONS OF THEIR LINES. THE CONTRACTOR SHALL KEEP A RECORD OF ANY DISCREPANCIES OR CHANGES IN THE LOCATIONS OF ANY UTILITIES SHOWN OR ENCOUNTERED DURING CONSTRUCTION. ANY DISCREPANCIES SHALL BE REPORTED TO NITSCH ENGINEERING.
3. THE CONTRACTOR SHALL COMPLY WITH MASSACHUSETTS GENERAL LAWS CHAPTER 82, SECTION 40, AS AMENDED, WHICH STATES THAT NO ONE MAY EXCAVATE IN THE COMMONWEALTH OF MASSACHUSETTS EXCEPT IN AN EMERGENCY WITHOUT 72 HOURS NOTICE, EXCLUSIVE OF SATURDAYS, SUNDAYS, AND LEGAL HOLIDAYS, TO NATURAL GAS PIPELINE COMPANIES, AND MUNICIPAL UTILITY DEPARTMENTS THAT SUPPLY GAS, ELECTRICITY, TELEPHONE, OR CABLE TELEVISION SERVICE IN OR TO THE CITY OR TOWN WHERE THE EXCAVATION IS TO BE MADE. THE CONTRACTOR SHALL CALL "DIG SAFE" AT 1-888-DIG-SAFE.
4. THE CONTRACTOR SHALL COMPLY WITH MASSACHUSETTS GENERAL LAWS CHAPTER 82A, ALSO REFERRED TO AS JACKIE'S LAW, AS DETAILED IN SECTION 520 CMR 14.00 OF THE CODE OF MASSACHUSETTS REGULATIONS.
5. ALL UTILITY CONNECTIONS ARE SUBJECT TO THE APPROVAL OF, AND GRANTING OF PERMITS BY, THE TOWN OF WESTFORD. IT SHALL BE THE RESPONSIBILITY OF THE GENERAL CONTRACTOR TO SEE THAT ALL PERMITS AND APPROVALS ARE OBTAINED BEFORE STARTING CONSTRUCTION. THE CONTRACTOR SHALL BE SOLELY RESPONSIBLE FOR MAKING ALL NECESSARY ARRANGEMENTS FOR AND FOR PERFORMING ANY NECESSARY WORK INVOLVED IN CONNECTION WITH THE DISCONTINUANCE OF ANY UTILITIES OR WITHIN THE JURISDICTION OF ANY UTILITY COMPANIES, SUCH AS ELECTRICITY, TELEPHONE, WATER, GAS, AND ANY SYSTEM OR SYSTEMS WHICH WILL BE AFFECTED BY THE WORK TO BE PERFORMED UNDER THIS CONTRACT. THE CONTRACTOR SHALL NOTIFY ALL APPROPRIATE AGENCIES, DEPARTMENTS, AND UTILITY COMPANIES, IN WRITING, AT LEAST 48 HOURS AND NOT MORE THAN 30 DAYS PRIOR TO ANY CONSTRUCTION. CONSTRUCTION SHALL NOT INTERFERE WITH OR INTERRUPT UTILITIES WHICH ARE TO REMAIN IN OPERATION.
6. THE CONTRACTOR SHALL COMPLY WITH ALL APPLICABLE FEDERAL, STATE, AND LOCAL LAWS, RULES, REGULATIONS AND SAFETY CODES IN THE CONSTRUCTION OF ALL IMPROVEMENTS.
7. THE CONTRACTOR SHALL TAKE ADEQUATE PRECAUTIONS TO PROTECT ALL WALKS, GRADING, SIDEWALKS AND SITE DETAILS OUTSIDE OF THE LIMITS OF REGRADING AND WORK AS SHOWN ON THE DRAWINGS AND SHALL REPAIR AND REPLACE OR OTHERWISE MAKE GOOD AS DIRECTED BY THE ENGINEER OR OWNER'S DESIGNATED REPRESENTATIVE ANY SUCH OR OTHER DAMAGE SO CAUSED.
8. THE CONTRACTOR SHALL REMOVE FROM THE SITE ALL RUBBISH AND DEBRIS FOUND THEREON. STORAGE OF SUCH MATERIALS ON THE PROJECT SITE WILL NOT BE PERMITTED. THE CONTRACTOR SHALL LEAVE THE SITE IN SAFE, CLEAN, AND LEVEL CONDITION UPON COMPLETION OF THE SITE CLEARANCE WORK.
9. THE CONTRACTOR SHALL REMOVE FROM THE AREA OF CONSTRUCTION PAVEMENT, CONCRETE, GRANITE CURBING, CEMENT CURBING, POLES AND FOUNDATIONS, ISLANDS, TREE BERMS AND OTHER FEATURES WITHIN THE LIMITS OF CONSTRUCTION AS REQUIRED TO ACCOMMODATE NEW CONSTRUCTION WHETHER SPECIFIED ON THE DRAWINGS OR NOT.
10. ALL DRAIN WORK SHALL BE PERFORMED ACCORDING TO THE REQUIREMENTS AND STANDARD SPECIFICATIONS OF THE TOWN OF WESTFORD.
11. ELEVATIONS REFER TO THE MASSACHUSETTS MAINLAND STATE COORDINATE SYSTEM (NAD83)
12. CONTRACTOR SHALL MAINTAIN ALL EXISTING UTILITIES EXCEPT THOSE NOTED TO BE ABANDONED OR REMOVED & DISPOSED.
13. THE GENERAL CONTRACTOR IS RESPONSIBLE FOR TRENCHING, BACKFILLING, AND SURFACE RESTORATION FOR THE GAS LINE INSTALLATION.
14. FOR SOIL INFORMATION REFER TO GEOTECHNICAL REPORT.
15. ALL GRATES IN WALKWAYS SHALL BE ADA COMPLIANT.

UTILITY NOTES:

1. THE LOCATIONS AND ELEVATIONS OF ALL EXISTING UTILITIES SHALL BE CONSIDERED APPROXIMATE AND MUST BE VERIFIED BY THE CONTRACTOR PRIOR TO ANY UTILITY CONNECTIONS OR CROSSINGS OF PROPOSED UTILITIES AND EXISTING UTILITIES. THE CONTRACTOR SHALL CONTACT THE RESPECTIVE UTILITY COMPANIES RELATIVE TO THE LOCATIONS AND ELEVATIONS OF THEIR LINES. THE CONTRACTOR SHALL KEEP A RECORD OF ANY DISCREPANCIES OR CHANGES IN THE LOCATIONS OF ANY UTILITIES SHOWN OR ENCOUNTERED DURING CONSTRUCTION. ANY DISCREPANCIES SHALL BE REPORTED TO THE OWNER AND NITSCH ENGINEERING.
2. ALL UTILITY CONNECTIONS ARE SUBJECT TO THE APPROVAL OF, AND GRANTING OF PERMITS BY, THE CITY OF GLOUCESTER, IF APPLICABLE. IT SHALL BE THE SOLE RESPONSIBILITY OF THE GENERAL CONTRACTOR TO SEE THAT ALL PERMITS AND APPROVALS ARE OBTAINED BEFORE STARTING CONSTRUCTION. THE CONTRACTOR SHALL BE SOLELY RESPONSIBLE FOR MAKING ALL NECESSARY ARRANGEMENTS FOR AND FOR PERFORMING ANY NECESSARY WORK INVOLVED IN CONNECTION WITH OR THE DISCONTINUANCE OF ANY UTILITIES WITHIN THE JURISDICTION OF ANY UTILITY COMPANIES, SUCH AS ELECTRICITY, TELEPHONE, WATER, GAS, AND ANY SYSTEM OR SYSTEMS WHICH WILL BE AFFECTED BY THE WORK TO BE PERFORMED UNDER THIS CONTRACT. THE CONTRACTOR SHALL NOTIFY ALL APPROPRIATE AGENCIES, DEPARTMENTS, AND UTILITY COMPANIES, IN WRITING, AT LEAST 48 HOURS AND NOT MORE THAN 30 DAYS PRIOR TO ANY CONSTRUCTION.
3. CONSTRUCTION SHALL NOT INTERFERE WITH OR INTERRUPT UTILITIES WHICH ARE TO REMAIN IN OPERATION.
4. ALL WATER, SEWER, AND DRAIN WORK SHALL BE PERFORMED ACCORDING TO THE REQUIREMENTS AND STANDARD SPECIFICATIONS OF THE CITY OF GLOUCESTER.
5. UTILITY STRUCTURES TO BE ABANDONED SHALL BE REMOVED TO A DEPTH OF NO LESS THAN 3 FEET BELOW FINISHED GRADE, THE BOTTOMS OF THE STRUCTURES SHALL BE BROKEN AND THE STRUCTURES SHALL BE BACKFILLED WITH GRAVEL BORROW AND COMPACTED.
6. CONTRACTOR SHALL MAINTAIN ALL EXISTING UTILITIES EXCEPT THOSE NOTED TO BE ABANDONED AND/OR REMOVED & DISPOSED.
7. ALL ON-SITE UTILITIES SHALL BE INSTALLED UNDERGROUND UNLESS OTHERWISE NOTED.
8. MANHOLE FRAMES, COVERS, VALVES, CLEANOUTS, ETC. SHALL BE RAISED TO FINISHED GRADE PRIOR TO FINAL PAVING CONSTRUCTION.
9. ALL FRAMES AND COVERS FOR DRAINAGE AND SEWER STRUCTURES SHALL BE MANUFACTURED IN THE UNITED STATES OF AMERICA.
10. THE CONTRACTOR SHALL COMPLY WITH ALL APPLICABLE FEDERAL, STATE, AND LOCAL LAWS, RULES, REGULATIONS AND SAFETY CODES IN THE CONSTRUCTION OF ALL IMPROVEMENTS.

SEDIMENTATION AND EROSION CONTROL NOTES

1. ALL EROSION AND SEDIMENT CONTROL MEASURES ARE TO BE CONSTRUCTED AND MAINTAINED IN ACCORDANCE WITH PUBLISHED EROSION CONTROL AND SEDIMENT GUIDELINES FOR MASSACHUSETTS (SEE REFERENCE BELOW, NOTE #7).
2. ANY EROSION AND SEDIMENT CONTROL MEASURES FOR THE STABILIZATION OF SLOPES ARE TEMPORARY FOR CONSTRUCTION PHASES ONLY. SEE GRADING PLAN FOR FINAL STABILIZATION OF SLOPES.
3. SEDIMENT CONTROL MEASURES SHALL BE ADJUSTED TO MEET FIELD CONDITIONS AT THE TIME OF AND DURING ALL PHASES OF CONSTRUCTION AND BE CONSTRUCTED PRIOR TO AND IMMEDIATELY AFTER ANY GRADING OR DISTURBANCE OF EXISTING SURFACE MATERIAL ON THE SITE.
4. PERIODIC INSPECTION AND MAINTENANCE OF ALL SEDIMENT CONTROL STRUCTURES SHALL BE PROVIDED TO ENSURE THAT THE INTENDED PURPOSE IS ACCOMPLISHED. THE CONTRACTOR SHALL BE RESPONSIBLE FOR ALL SEDIMENT LEAVING THE LIMIT OF WORK. SEDIMENT CONTROL MEASURES SHALL BE IN WORKING CONDITION AT THE END OF EACH WORKING DAY.
5. ALL POINTS OF CONSTRUCTION INGRESS OR EGRESS WILL BE PROTECTED WITH A STABILIZED CONSTRUCTION ENTRANCE TO PREVENT TRACKING OF MUD ONTO PUBLIC WAYS.
6. ALL SEDIMENT WILL BE PREVENTED FROM ENTERING ANY STORM DRAINAGE SYSTEM (I.E. THROUGH THE USE OF STRAW BALES, CATCH BASIN SEDIMENT TRAPS, GRAVEL, BOARDS OR OTHER APPLICABLE METHODS).
7. THE CONTRACTOR INSTALLING THE ABOVE SHALL OBTAIN AND FOLLOW THE "MASSACHUSETTS EROSION AND SEDIMENT CONTROL GUIDELINES FOR URBAN AND SUBURBAN AREAS" PREPARED BY DEPARTMENT OF ENVIRONMENTAL PROTECTION, BUREAU OF RESOURCE PROTECTION, DATED MAY 1997, REPRINTED MAY 2003 (OR LATEST EDITION) AND THE 2012 NPDES GENERAL PERMIT FOR STORMWATER DISCHARGES FROM CONSTRUCTION ACTIVITIES, OR LATEST EDITION.
8. ALL DRAINAGE SWALES AND GROUND SURFACES WITHIN THE LIMIT OF WORK SHALL BE PROTECTED.
9. AFTER ANY SIGNIFICANT RAINFALL (0.25" OR GREATER), SEDIMENT CONTROL STRUCTURES SHALL BE INSPECTED FOR INTEGRITY. ANY DAMAGED DEVICES SHALL BE CORRECTED IMMEDIATELY.
10. ALL STOCKPILES SHALL BE PROTECTED AND LOCATED A MINIMUM OF 100' AWAY FROM EXISTING WATER BODIES OR WETLANDS & WITHIN THE LIMIT OF WORK. SOIL STOCKPILES SHALL BE PROTECTED FROM CONTACT WITH ONSITE STORMWATER RUNOFF USING TEMPORARY PERIMETER SEDIMENT BARRIERS. A COVER (TARP) OR APPROPRIATE TEMPORARY STABILIZATION WILL BE PROVIDED TO MINIMIZE SEDIMENT DISCHARGE.
11. STABILIZED PORTIONS OF A SITE SHALL BE INSPECTED AT LEAST ONCE PER MONTH.
12. ANY SEDIMENT TRACKED ONTO PAVED AREAS SHALL BE SWEPT AT THE END OF EACH WORKING DAY.
13. ALL DEBRIS GENERATED DURING SITE PREPARATION ACTIVITIES SHALL BE LEGALLY DISPOSED OF OFF-SITE.
14. ALL TOPSOIL ENCOUNTERED WITHIN THE WORK AREA SHALL BE STRIPPED TO ITS FULL DEPTH AND STOCKPILED FOR REUSE. TOPSOIL NOT NEEDED AFTER COMPLETION OF ALL FINAL TOPSOIL SPREADING AND GRASSING SHALL BE REMOVED FROM THE SITE AND LEGALLY RECYCLED OR DISPOSED OF. TOPSOIL PILES SHALL REMAIN SEGREGATED FROM EXCAVATED SUBSURFACE SOIL MATERIALS.
15. TEMPORARY DIVERSION DITCHES, PERMANENT DITCHES, CHANNELS, EMBANKMENTS AND ANY DENUDED SURFACE WHICH WILL BE EXPOSED FOR A PERIOD OF 14 CALENDAR DAYS OR MORE SHALL BE CONSIDERED CRITICAL VEGETATION AREAS. THESE AREAS SHALL BE MULCHED WITH STRAW. MULCH SHALL BE SPREAD UNIFORMLY IN A CONTINUOUS BLANKET OF SUFFICIENT THICKNESS TO COMPLETELY HIDE THE SOIL FROM VIEW.
16. AN EROSION CONTROL BARRIER SHALL BE INSTALLED ALONG THE EDGE OF PROPOSED DEVELOPMENT AS INDICATED IN THE PLAN PRIOR TO COMMENCEMENT OF DEMOLITION OR CONSTRUCTION OPERATIONS.
17. THE CONTRACTOR IS RESPONSIBLE FOR REMOVAL OF ALL EROSION AND SEDIMENT CONTROLS AT THE COMPLETION OF SITE CONSTRUCTION.
18. MEANS OF EROSION AND SEDIMENT PROTECTION AS NOTED ON THE DRAWINGS INDICATE THE MINIMUM PROVISIONS NECESSARY. ADDITIONAL MEANS OF PROTECTION SHALL BE PROVIDED BY THE CONTRACTOR AS REQUIRED FOR CONTINUED OR UNFORESEEN EROSION PROBLEMS, AT NO ADDITIONAL EXPENSE TO THE OWNER.
19. THE CONTRACTOR SHALL USE TEMPORARY SEEDING, MULCHING OR OTHER APPROVED STABILIZATION MEASURES TO PROTECT EXPOSED AREAS DURING PROLONGED CONSTRUCTION OR OTHER LAND DISTURBANCE. STOCKPILES THAT WILL BE EXPOSED FOR LONGER THAN 14 CALENDAR DAYS SHALL BE SEEDED WITH AN ANNUAL RYE.

ABBREVIATIONS

AD	AREA DRAIN
BC	BOTTOM OF CURB
BG	BOTTOM OF STEEL GIRDER
BLDG.	BUILDING
BW	BOTTOM OF WALL
CATV	CABLE TELEVISION
CB	CATCH BASIN
CI	CAST IRON PIPE
CLDI	CEMENT LINED DUCTILE IRON PIPE
CLF	CHAIN LINK FENCE
CONC.	CONCRETE
CPP	CORRUGATED PLASTIC PIPE
CSMH	COMBINED SEWER MANHOLE
DIP	DUCTILE IRON PIPE
DMH	DRAINAGE MANHOLE
EHH	ELECTRIC HANDHOLE
EMH	ELECTRIC MANHOLE
FFE	FINISHED FLOOR ELEVATION
FS	FIRE SERVICE
GG	GAS GATE
GV	GAS VALVE
HYD	HYDRANT
I	INVERT ELEVATION
LF	LINEAR FEET
LOC.	LOCATION
LP	STREET LIGHT POLE
M&P	MAINTAIN AND PROTECT
OHW	OVERHEAD WIRE
PVC	POLYVINYL CHLORIDE PIPE
R	RIM ELEVATION
RCP	REINFORCED CONCRETE PIPE
REC.	RECORD
R&D	REMOVE AND DISPOSE
SMH	SEWER MANHOLE
TC	TOP OF CURB
TMH	TELEPHONE MANHOLE
TW	TOP OF WALL
TYP.	TYPICAL
UP	UTILITY POLE
VCP	VITRIFIED CLAY PIPE
WG	WATER GATE
WV	WATER VALVE
W/	WITH
W/O	WITHOUT

LEGEND

CB	CATCH BASIN
DMH	DRAIN MANHOLE
SMH	SEWER MANHOLE
WQS	WATER QUALITY STRUCTURE
UP	UTILITY POLE
LP	STREET LIGHT POLE
	ABANDON UTILITY LINE
	CABLE TELEVISION LINE
	DRAIN LINE
	UNDERGROUND ELECTRIC LINE
	GAS LINE
	SEWER LINE
	TELEPHONE/DATA LINE
	WATER LINE
OHW OHW	OVERHEAD WIRES
	EDGE OF TREES
X X	CHAIN LINK FENCE
	STONE WALL

DEMOLITION NOTES:

1. THE CONTRACTOR SHALL MAKE ALL NECESSARY CONSTRUCTION NOTIFICATIONS AND APPLY FOR AND OBTAIN ALL NECESSARY CONSTRUCTION PERMITS. THE CONTRACTOR SHALL ALSO PAY ALL FEES AND POST ALL BONDS ASSOCIATED WITH THE SAME, AND COORDINATE WITH THE ARCHITECT AS REQUIRED.
2. CONTRACTOR SHALL BE SOLELY RESPONSIBLE FOR JOB SITE SAFETY AND ALL CONSTRUCTION MEANS AND METHODS. PRIOR TO BEGINNING CONSTRUCTION, CONTRACTOR SHALL WALK THE SITE WITH THE ARCHITECT TO GAIN A THOROUGH UNDERSTANDING OF THE PROJECT, INCLUDING ANY SPECIAL CONDITIONS AND CONSTRAINTS.
3. SITE PREPARATION AND DEMOLITION SHALL INCLUDE THOSE AREAS WITHIN THE LIMIT OF WORK LINE AS SHOWN ON THIS CONTRACT.
4. IT IS THE CONTRACTOR'S RESPONSIBILITY TO VERIFY ALL CONDITIONS IN THE FIELD AND REPORT DISCREPANCIES BETWEEN PLANS AND ACTUAL CONDITIONS TO THE OWNER OR OWNER'S REPRESENTATION IMMEDIATELY.
5. THE LOCATION OF UNDERGROUND UTILITIES SHOWN ON PLANS ARE DIAGRAMMATIC ONLY, AND ALL UTILITIES MAY NOT BE SHOWN. THE CONTRACTOR SHALL CONTACT THE PROPER LOCAL AUTHORITIES OR RESPECTIVE UTILITY COMPANY TO CONFIRM THE LOCATION OF ALL EXISTING UTILITIES BEFORE COMMENCING WORK. ANY DAMAGE DUE TO FAILURE OF THE CONTRACTOR TO CONTACT THE PROPER AUTHORITIES SHALL BE BORNE BY THE CONTRACTOR.
6. CARE SHOULD BE TAKEN IN ALL EXCAVATIONS DUE TO POSSIBLE EXISTENCE OF UNRECORDED UTILITY LINES.
7. EXCAVATION REQUIRED WITHIN PROXIMITY OF EXISTING UTILITY LINES SHALL BE DONE BY HAND. CONTRACTOR SHALL REPAIR ANY DAMAGE TO EXISTING UTILITY LINES OR STRUCTURES INCURRED DURING CONSTRUCTION OPERATIONS AT NO ADDITIONAL COST TO COMMONWEALTH/OWNER.
8. ANY AREA OUTSIDE THE LIMIT OF WORK THAT IS DISTURBED SHALL BE RESTORED TO ITS ORIGINAL CONDITION AT NO ADDITIONAL COST TO THE OWNER.
9. CONSULT ALL OF THE DRAWINGS AND SPECIFICATIONS FOR COORDINATION REQUIREMENTS BEFORE COMMENCING DEMOLITION.
10. CONTRACTOR SHALL SUPPLY AND MAINTAIN FOR THE DURATION OF DEMOLITION ALL NECESSARY DEVICES FOR EROSION, SEDIMENT AND DUST CONTROL, ETC., INCLUDING THOSE DEVICES NECESSARY FOR STOCKPILES AND PROTECTION OF ADJACENT PUBLIC WAYS, AND SHALL REMOVE THE DEVICES AFTER PROJECT COMPLETION.
11. ALL POINTS OF CONSTRUCTION EGRESS OR INGRESS SHALL BE MAINTAINED TO PREVENT TRACKING OR FLOWING OF SEDIMENT ONTO PUBLIC LANDS.
12. THE CONTRACTOR SHALL BE RESPONSIBLE TO COORDINATE HIS EFFORTS OF THE DEMOLITION AND RELATION OF UTILITIES WITH ALL TRADES, IF APPLICABLE.
13. ALL ITEMS REQUIRING REMOVAL SHALL BE REMOVED TO FULL DEPTH TO INCLUDE BASE MATERIAL AND FOOTINGS OR FOUNDATIONS AS APPLICABLE, AND LEGALLY DISPOSED OF OFF-SITE BY CONTRACTOR.
14. UTILITY STRUCTURES TO BE ABANDONED SHALL BE REMOVED TO A DEPTH OF NO LESS THAN 3 FEET BELOW FINISHED GRADE, THE BOTTOMS OF THE STRUCTURES SHALL BE BROKEN AND THE STRUCTURES SHALL BE BACKFILLED WITH GRAVEL BORROW AND COMPACTED
15. AT ALL LOCATIONS WHERE EXISTING CURBING, CONCRETE PAVEMENT OR BITUMINOUS CONCRETE ROADWAY ABUTS NEW CONSTRUCTION, THE EDGE OF THE EXISTING CURB OR PAVEMENT SHALL BE SAW CUT TO A CLEAN, SMOOTH EDGE.
16. EXTEND DESIGNATED LIMIT OF WORK AS NECESSARY TO ACCOMPLISH ROUGH GRADING, EROSION CONTROL, TREE PROTECTION, AND SITE WORK AS REQUIRED BY THESE DRAWINGS AND SPECIFICATIONS. THE STREET TREES ALONG MAIN STREET SHALL BE PROTECTED DURING CONSTRUCTION.

Nitsch Engineering
www.nitscheng.com
2 Center Plaza, Suite 430
Boston, MA 02108
T: (617) 338-0063
F: (617) 338-6472
► Civil Engineering
► Land Surveying
► Transportation Engineering
► Sustainable Site Consulting
► Planning
► GIS

ARCHITECTS • PROJECT MANAGERS
DORE & WHITTIER ARCHITECTS, INC.
Newburyport, MA 01950
260 Merrimac Street, Bldg 7
P : 978.499.2999
F : 978.499.2944
Burlington, VT 05401
212 Battery Street
P : 802.863.1428
F : 802.863.6955
www.doreandwhittier.com

Project No. 14-690

WESTFORD FIRE STATION
65 Boston Road
Westford, MA 01886

COPYRIGHT © 2014 by Dore & Whittier Architects Inc. (D&W) These documents are D&W's instruments of service and as such D&W retains all copyrights, common law and statutory rights. Use of these documents without D&W's express, written permission will result in copyright infringement.

SCHEMATIC DESIGN

REVISION:	Date:

DATE:	SCALE:
11/04/2015	NTS
DRAWN BY:	CHK'D BY:
NAZ	Checker

SHEET TITLE: NOTES, LEGEND, & ABBREVIATIONS

SHEET #: C.1

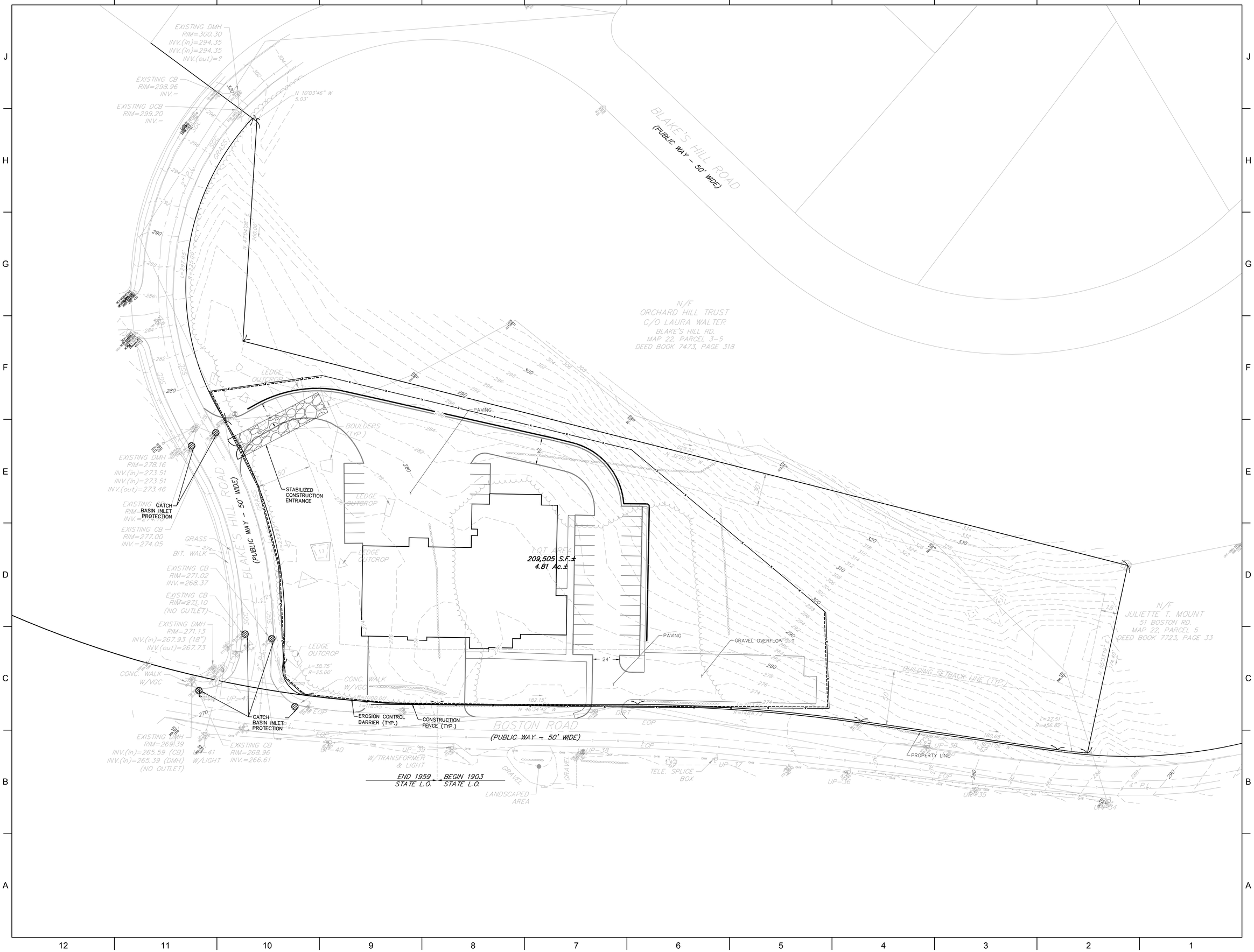

Nitsch Engineering
www.nitscheng.com
2 Center Plaza, Suite 430
Boston, MA 02108
T: (617) 338-0063
F: (617) 338-6472
- Civil Engineering
- Land Surveying
- Transportation Engineering
- Sustainable Site Consulting
- Planning
- GIS

ARCHITECTS • PROJECT MANAGERS
North Andover, MA 01845
242 Merrimack Street, Bldg 7
T : 978.499.2794
F : 978.499.2796
Burlington, VT 05401
212 Battery Street
T : 802.863.4446
F : 802.863.6955
www.doreandwhittier.com
DORE & WHITTIER ARCHITECTS, INC.

Project No. 14-690

WESTFORD FIRE STATION

65 Boston Road
Westford, MA 01886

COPYRIGHT © 2014 by Dore & Whittier Architects Inc. (D&W) These documents are D&W's instruments of service and as such are subject to copyright and other intellectual property rights. Use of these documents without D&W's express written permission will result in copyright infringement.

SCHEMATIC DESIGN

REVISION:	Date:

DATE: 11/04/2015	SCALE:
DRAWN BY: NAZ	CHK'D BY: Checker

SHEET TITLE:
EROSION & SEDIMENTATION CONTROL PLAN

SHEET #:
C.2

C:\Users\creardon\Documents\ARCH - 690 - WESTFORD FIRE STATION_creardon.rvt
11/2/2015 2:34:50 PM

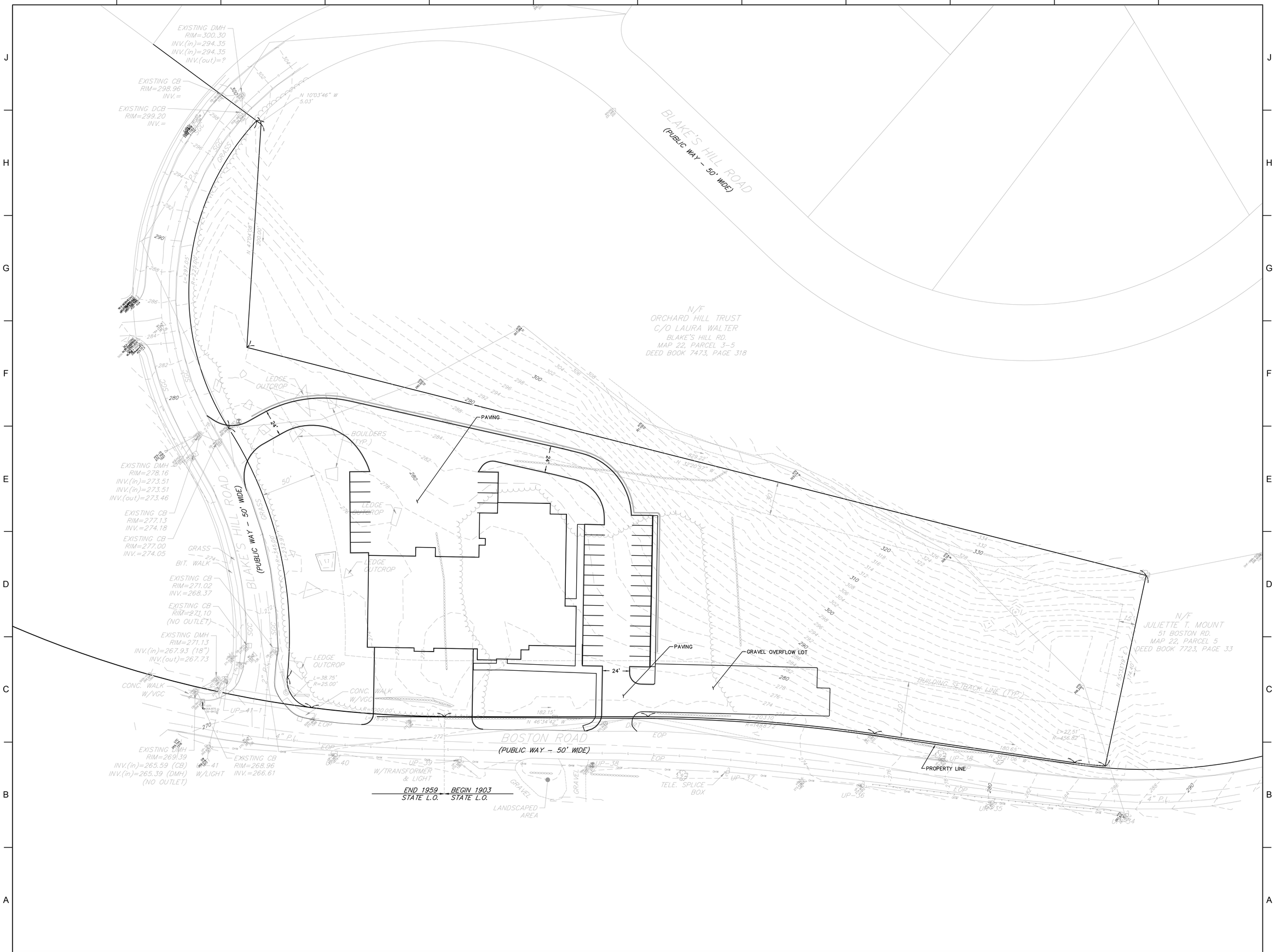

Nitsch Engineering

www.nitscheng.com
2 Center Plaza, Suite 430
Boston, MA 02108
T: (617) 338-0063
F: (617) 338-6472

- Civil Engineering
- Land Surveying
- Transportation Engineering
- Sustainable Site Consulting
- Planning
- GIS

ARCHITECTS • PROJECT MANAGERS
Newburyport, MA 01950
P: 978.499.7994
F: 978.499.7997
Burlington, VT 05401
212 Battery Street
P: 802.863.1445
F: 802.863.6955
www.doreandwhitter.com
DORE & WHITTER ARCHITECTS, INC.

Project No. 14-690

WESTFORD FIRE STATION

65 Boston Road
Westford, MA 01886

COPYRIGHT © 2014 by Dore & Whitter Architects Inc. (D&W) These documents are D&W's instruments of service and as such are the property of D&W and protected by all statutory rights. Use of these documents without D&W's written and verbal permission will result in copyright infringements.

SCHEMATIC DESIGN

REVISION:	Date:

DATE: 11/04/2015	SCALE: 1"=20'
DRAWN BY: NAZ	CHK'D BY: Checker

SHEET TITLE:
SITE LAYOUT PLAN

SHEET #:
C.3

C:\Users\creardon\Documents\ARCH - 690 - WESTFORD FIRE STATION_creardon.rvt
11/2/2015 2:34:50 PM

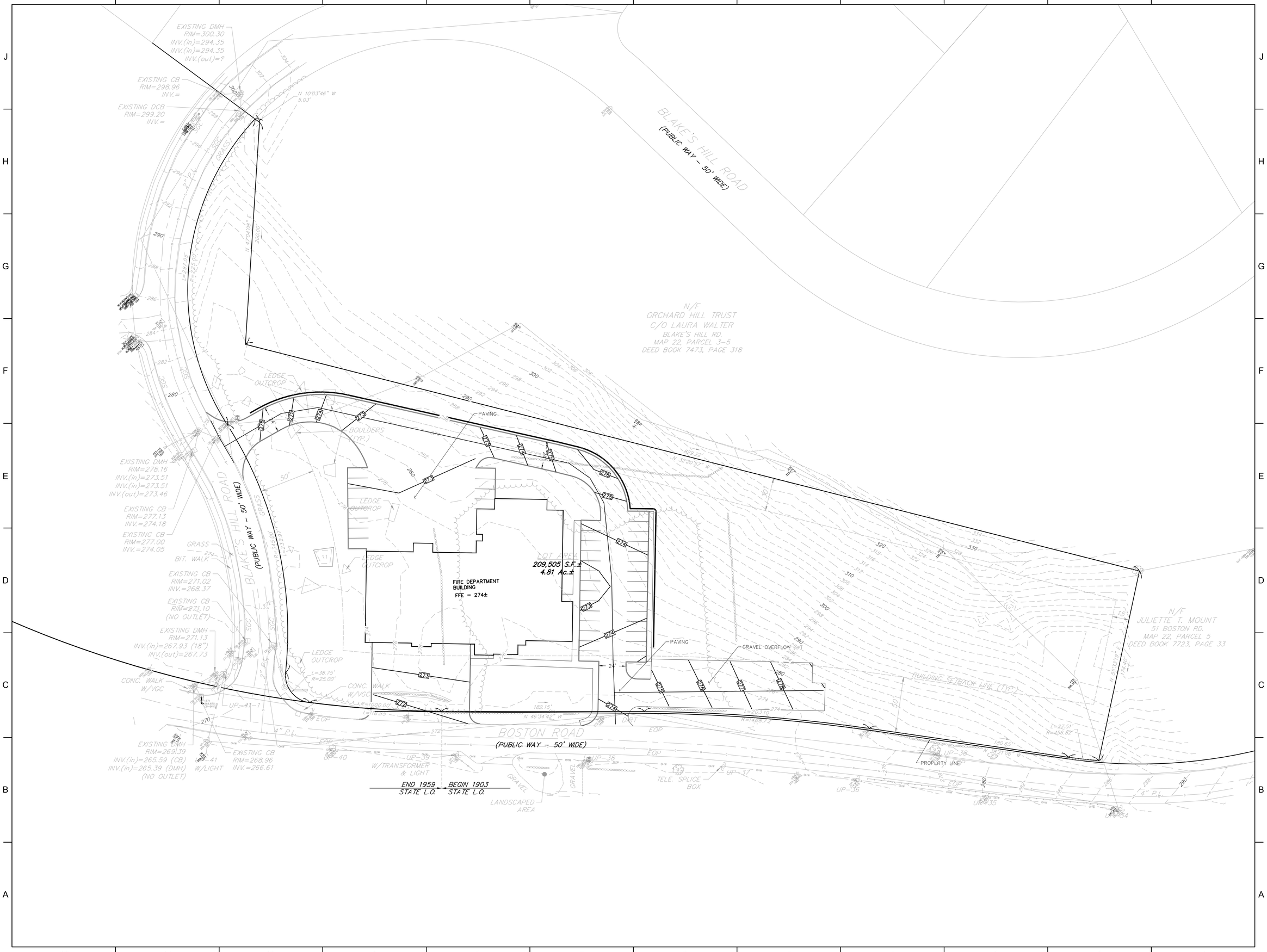

Nitsch Engineering

www.nitscheng.com
2 Center Plaza, Suite 430
Boston, MA 02108
T: (617) 338-0063
F: (617) 338-6472

- Civil Engineering
- Land Surveying
- Transportation Engineering
- Sustainable Site Consulting
- Planning
- GIS

ARCHITECTS • PROJECT MANAGERS

North Hampton, NH 03862
262 Mast Road, Suite B&C
P : 978.499.2944
F : 978.499.2947

Burlington, VT 05401
212 Battery Street
P : 802.863.4446
F : 802.863.6955

DORE & WHITTIER ARCHITECTS, INC.
www.doreandwhittier.com

Project No.
14-690

WESTFORD FIRE STATION

65 Boston Road
Westford, MA 01886

COPYRIGHT © 2014 by Dore & Whitter Architects Inc. (D&W)
These documents are D&W's instruments of service and as such D&W retains all copyrights, common law and statutory rights. Use of these documents without D&W's express, written permission will result in copyright infringement.

SCHEMATIC DESIGN

REVISION:	Date:

DATE:	SCALE:
11/04/2015	
DRAWN BY: NAZ	CHK'D BY: Checker

SHEET TITLE:
SITE GRADING PLAN

SHEET #:
C.4

C:\Users\creardon\Documents\ARCH - 690 - WESTFORD FIRE STATION_creardon.rvt

11/2/2015 2:34:50 PM

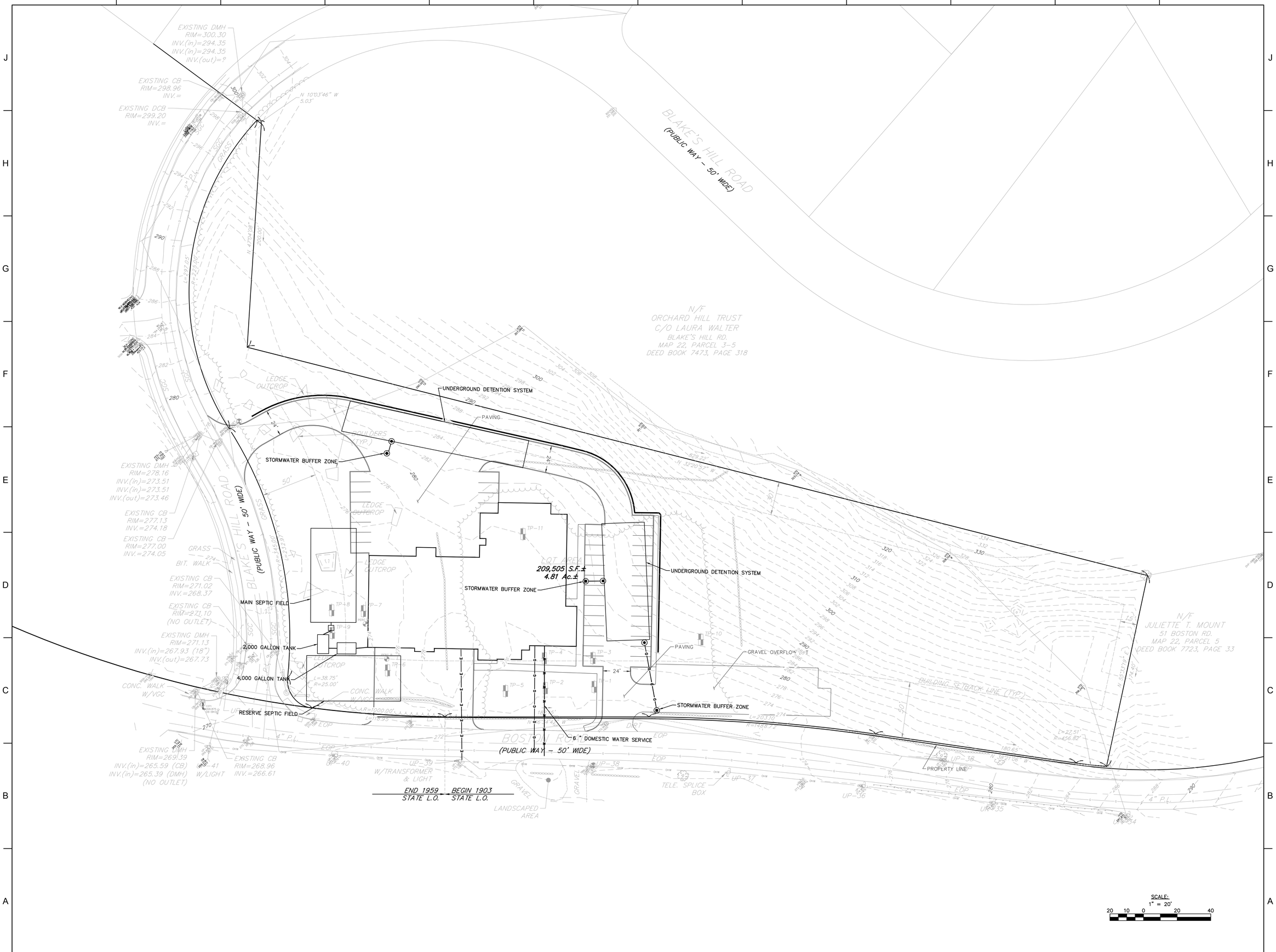

Nitsch Engineering

www.nitscheng.com
2 Center Plaza, Suite 430
Boston, MA 02108
T: (617) 338-0063
F: (617) 338-6472

- Civil Engineering
- Land Surveying
- Transportation Engineering
- Sustainable Site Consulting
- Planning
- GIS

Project No. 14-690

WESTFORD FIRE STATION

65 Boston Road
Westford, MA 01886

COPYRIGHT © 2014 by Dore & Whitten Architects Inc. (D&W). These documents are D&W's instruments of service and as such D&W retains all copyrights, common-law and statutory rights. Use of these documents without D&W's express, written permission will result in copyright infringement.

SCHEMATIC DESIGN

REVISION:	Date:

DATE:	SCALE:
11/04/2015	1" = 20'
DRAWN BY: NAZ	CHK'D BY: Checker

SHEET TITLE:
SITE UTILITY PLAN

SHEET #:
C.5

11/2/2015 2:34:50 PM C:\Users\creardon\Documents\ARCH - 690 - WESTFORD FIRE STATION_creardon.rvt

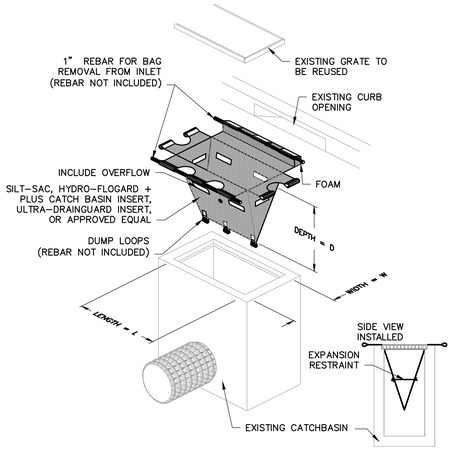

THIS METHOD OF INLET PROTECTION IS APPLICABLE WHERE THE INLET DRAINS SHEET, OVERLAND OR CONCENTRATED FLOWS (NOT GREATER THAN 1 CFS). THE METHOD CAN DRAIN FLAT AREA TO STEEP SLOPES. INLET CAPACITY WILL BE DECREASED WITH THIS METHOD AND THE CONTRACTOR SHALL EXPECT PONDING DURING HIGH FLOW EVENTS.

INLET PROTECTION
CATCH BASIN W/ SILTATION SACK

NOT TO SCALE

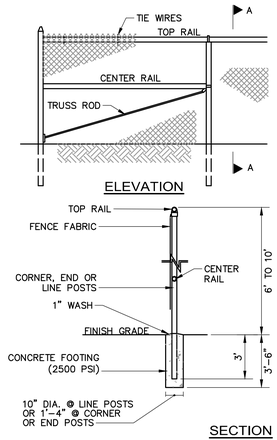

NOTES
1. PULL POSTS SHALL BE SPACED AT INTERVALS NOT EXCEEDING 500 FEET.
2. END, GATE AND CORNER POSTS SHALL BE BRACED TO ADJACENT LINE POSTS. (MORE THAN 30° CHANGE IN DIRECTION CONSTITUTES A CORNER)
3. FABRIC SHALL BE 0.148" WIRE, WOVEN INTO APPROXIMATELY 2" DIAMOND MESH.
4. ZINC-COATED STEEL FABRIC BASE METAL SHALL BE COATED WITH PRIME WESTERN SPELTER OR EQUAL.
5. ALUMINUM COATED STEEL FABRIC BASE METAL SHALL BE COATED WITH ALUMINUM ALLOY.
6. FENCE POSTS AND RAILS SHALL RECEIVE THE SAME COATING AND TREATMENT AS THE FENCE FABRIC (DESCRIBED ABOVE).
7. SEE SPECIFICATIONS FOR POST DIMENSIONS.
8. THE CONTRACTOR SHALL REMOVE AND DISPOSE OF THE TEMPORARY CONSTRUCTION FENCE AT THE CONCLUSION OF THE PROJECT IF NECESSARY.

CHAIN LINK FENCE DETAIL

NOT TO SCALE

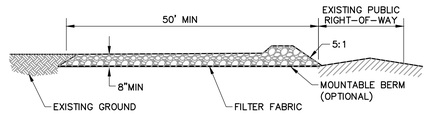

SIDE ELEVATION

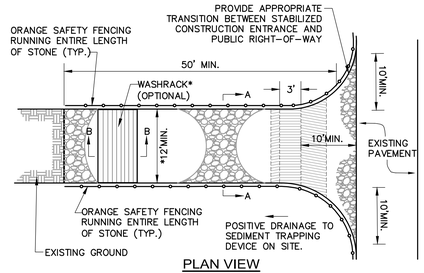

PLAN VIEW

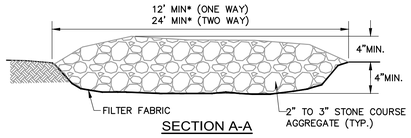

SECTION A-A

* MUST EXTEND FULL WIDTH OF INGRESS AND EGRESS OPERATION

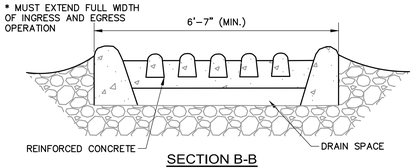

SECTION B-B

CONSTRUCTION SPECIFICATIONS

1. STONE SIZE – USE 2" TO 3" STONE.
2. LENGTH – GREATER THAN OR EQUAL TO 50 FEET
3. THICKNESS – 8"
4. WIDTH – TWELVE FOOT MINIMUM (ONE WAY), TWENTY FOUR FOOT MINIMUM (TWO WAY), BUT NOT LESS THAN THE FULL WIDTH AT POINTS WHERE INGRESS OR EGRESS OCCURS.
5. SURFACE WATER – ALL SURFACE WATER FLOWING OR DIVERTED TOWARD CONSTRUCTION ENTRANCES SHALL BE PIPED ACROSS THE ENTRANCE. IF PIPING IS IMPRACTICAL, A MOUNTABLE BERM SHALL BE PERMITTED.
6. MAINTENANCE – THE ENTRANCE SHALL BE MAINTAINED IN A CONDITION WHICH SHALL PREVENT TRACKING OR FLOWING OF SEDIMENT ONTO PUBLIC RIGHTS-OF-WAY. THIS MAY REQUIRE PERIODIC TOP DRESSING WITH ADDITIONAL STONE AS CONDITIONS DEMAND AND REPAIR OR CLEANOUT OF ANY MEASURES USED TO TRAP SEDIMENT. ALL SEDIMENT SPILLED, DROPPED, WASHED OR TRACKED ONTO PUBLIC RIGHTS-OF-WAY MUST BE REMOVED IMMEDIATELY.
7. PERIODIC INSPECTION AND NEEDED MAINTENANCE SHALL BE PROVIDED.

STABILIZED CONSTRUCTION ENTRANCE

NOT TO SCALE

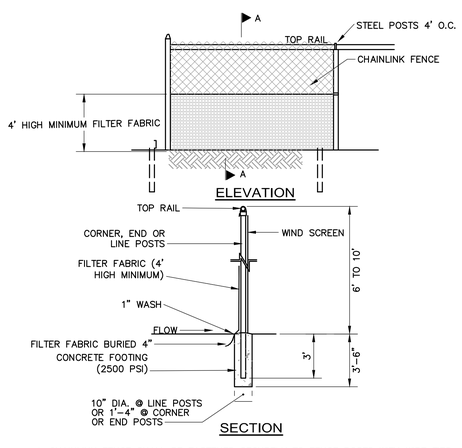

1. CHAINLINK FENCE SHALL BE FASTENED SECURELY TO FENCE POSTS WITH WIRE TIES.
2. FILTER FABRIC SHALL BE FASTENED SECURELY TO CHAINLINK FENCE WITH TIES SPACED HORIZONTALLY 24" AS THE TOP AND MIDSECTION.
3. WHEN TWO SECTIONS OF FILTER FABIRC ADJOIN EACH OTHER, THEY SHALL BE OVERLAPPED BY 6"
4. MAINTENANCE SHALL BE PERFORMED AS NEEDED AND MATERIAL SHALL BE REMOVED WHEN SEDIMENT BUILD-UP REACHES 50% OF THE HEIGHT OF THE FILTER FABRIC.
5. MAINTENANCE OF SILT FENCE SHALL BE RECORDED TO IN THE SWPPP

EROSION CONTROL BARRIER
SUPER SILT FENCE

NOT TO SCALE

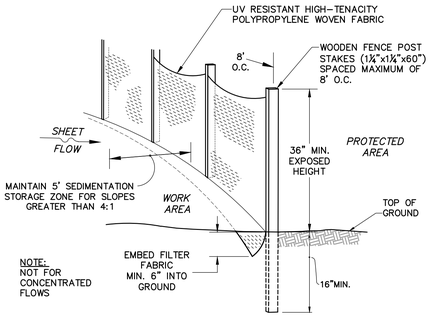

PERSPECTIVE VIEW

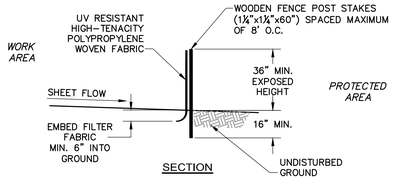

PERIMETER PROTECTION BARRIER A
SILT FENCE DETAIL

NOT TO SCALE

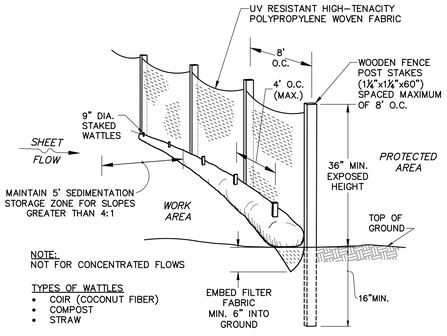

PERSPECTIVE VIEW

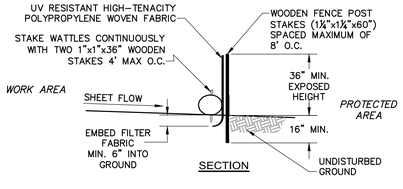

PERIMETER PROTECTION BARRIER B
SILT FENCE DETAIL WITH STRAW BALE

NOT TO SCALE

Nitsch Engineering
www.nitscheng.com
2 Center Plaza, Suite 430
Boston, MA 02108
T: (617) 338-0063
F: (617) 338-6472
► Civil Engineering
► Land Surveying
► Transportation Engineering
► Sustainable Site Consulting
► Planning
► GIS

ARCHITECTS • PROJECT MANAGERS
Northampton, MA 01060
2 Center Plaza
Boston, MA 02108
Burlington, VT 05401
211 Battery Street
P: 802.863.1474
F: 802.863.6955
www.doreandwhitter.com
DORE & WHITTIER ARCHITECTS, INC.

Project No. 14-690

WESTFORD FIRE STATION

65 Boston Road
Westford, MA 01886

COPYRIGHT © 2014 by Dore & Whitter Architects Inc. (D&W) These documents are D&W's instruments of service and as such D&W retains all copyrights, common law and statutory rights. Use of these documents without D&W's express, written permission will result in copyright infringement.

SCHEMATIC DESIGN

REVISION:	Date:

DATE:	SCALE:
11/04/2015	NTS
DRAWN BY: NAZ	CHK'D BY: Checker

SHEET TITLE: EROSION CONTROL DETAILS

SHEET #: **C.6**

C:\Users\creardon\Documents\ARCH - 690 - WESTFORD FIRE STATION_creardon.rvt

11/2/2015 2:34:50 PM

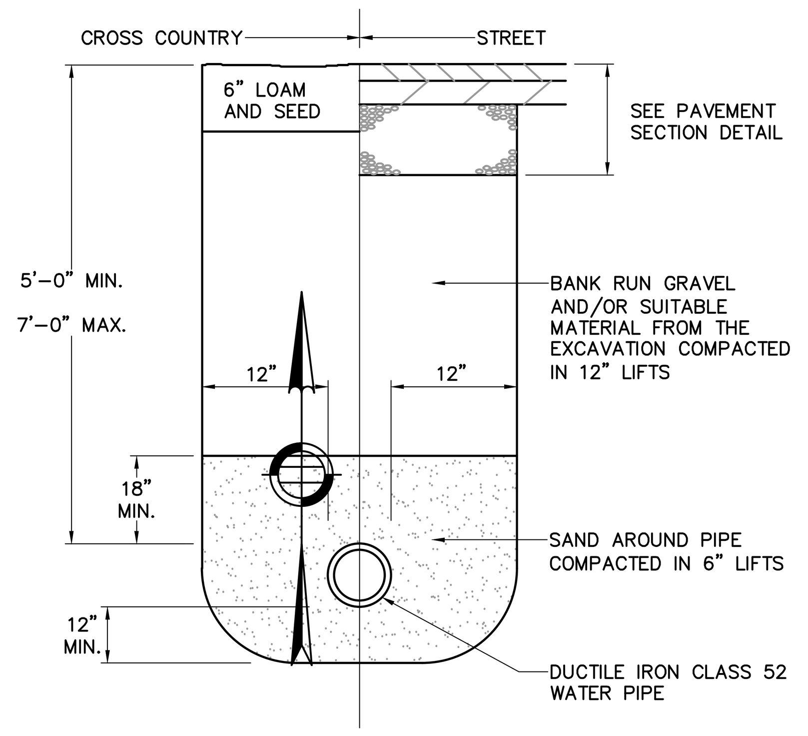

WATER TRENCH DETAIL
NOT TO SCALE

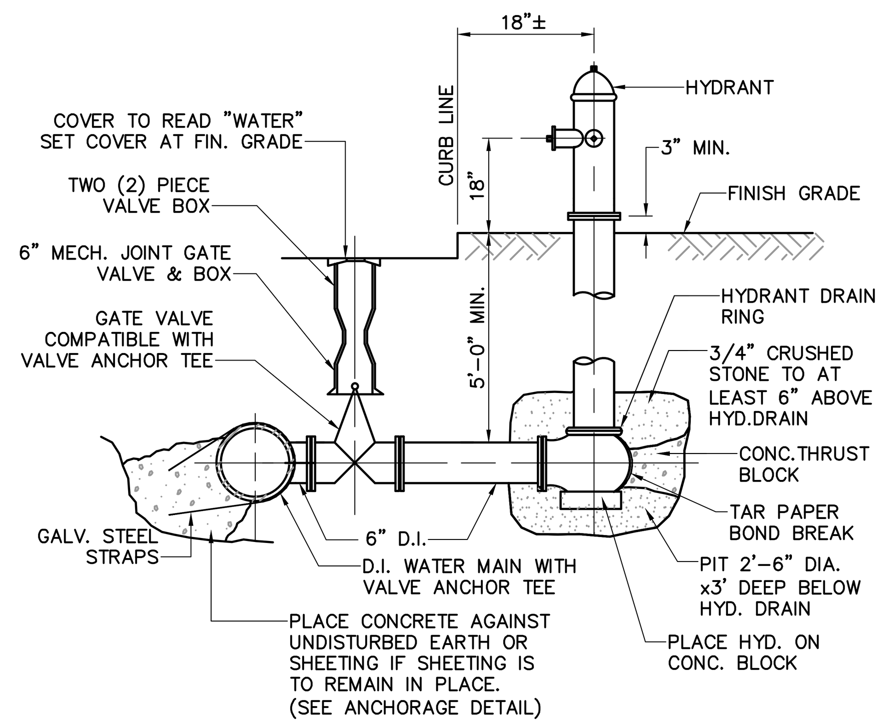

NOTE: ALL JOINTS ON HYDRANT BRANCH TO BE RESTRAINED JOINTS

FIRE HYDRANT DETAIL
NOT TO SCALE

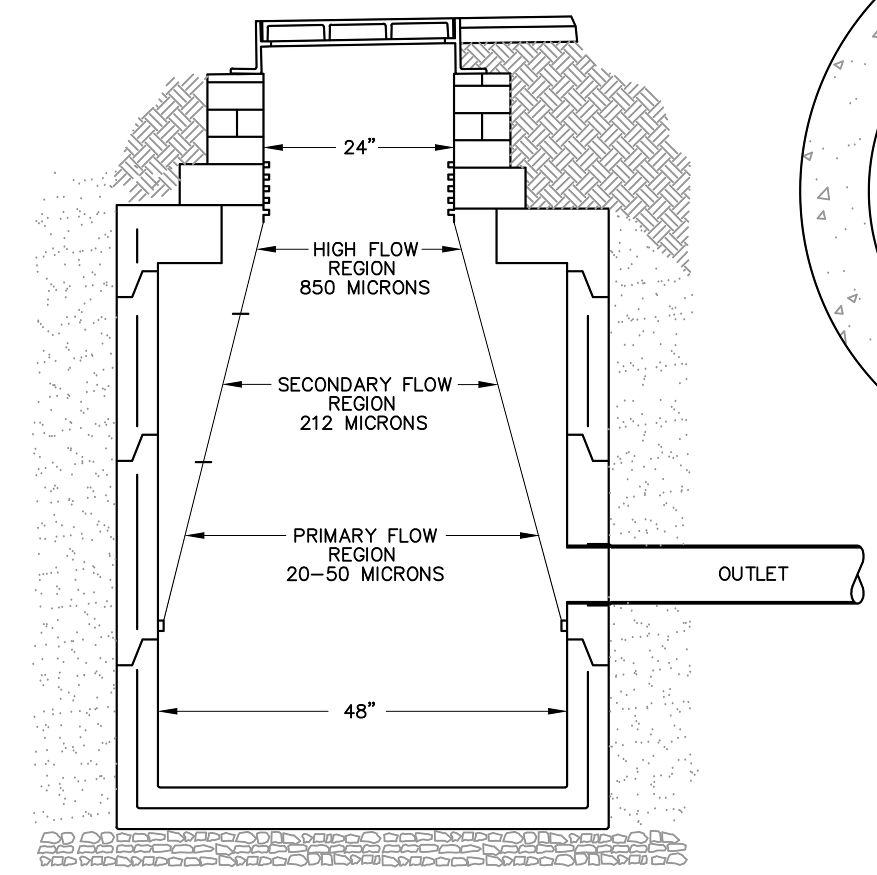

STORMWATER BUFFER ZONE
CATCH BASIN INSERT
NOT TO SCALE

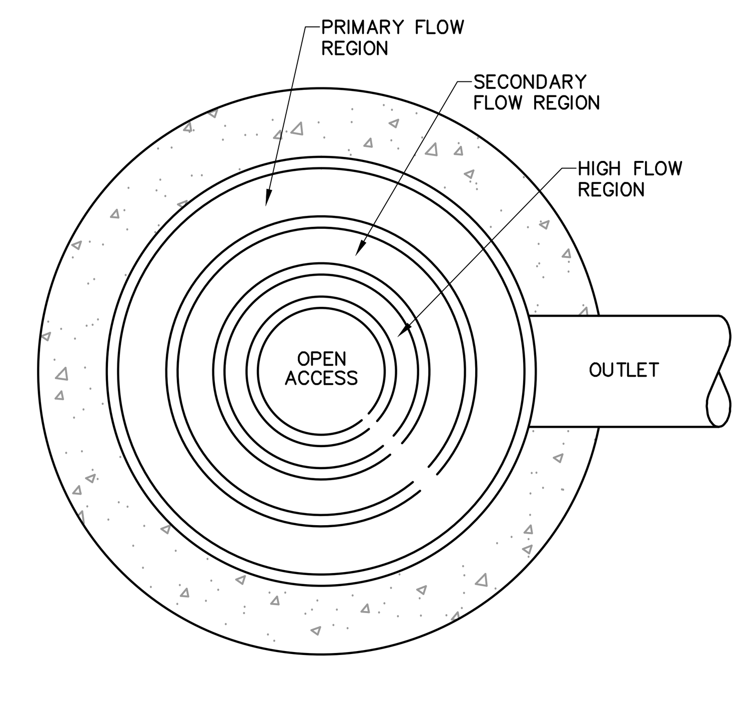

NOTES:

1. MANHOLES TO BE SET BY DRAINAGE CONTRACTOR IN CONJUNCTION WITH OTHER DRAINAGE MANHOLES AND PIPING, SET IN ACCORDANCE WITH CITY OR STATE SPECIFICATION WITH REGARD TO BASE AND BACKFILL MATERIALS, COMPACTION AND OTHER TOLERANCES.
2. STORMWATER QUALITY INTERNAL PARTS TO BE ADJUSTED BY STORMWATER BUFFER ZONE AFTER INLET GRATE IS INSTALLED.
3. STORMWATER BUFFER ZONE IS COVERED BY U.S. PATENT #7,658,857 AND 7,981,300.
4. CONTACT STORMWATER BUFFER ZONE FOR DETAILS NOT SHOWN ON THIS DRAWING. 978-801-1729 OR CHECK www.mastep.net FOR ADDITIONAL PERFORMANCE DATA.

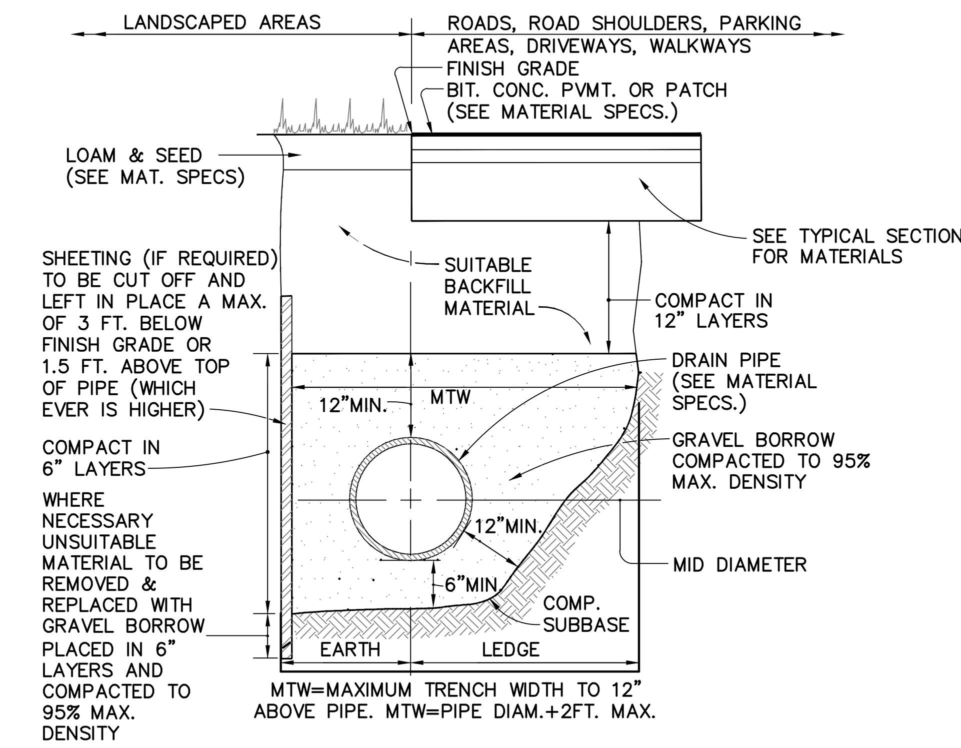

STANDARD TRENCH DETAIL
FOR UTILITY PIPE
NOT TO SCALE

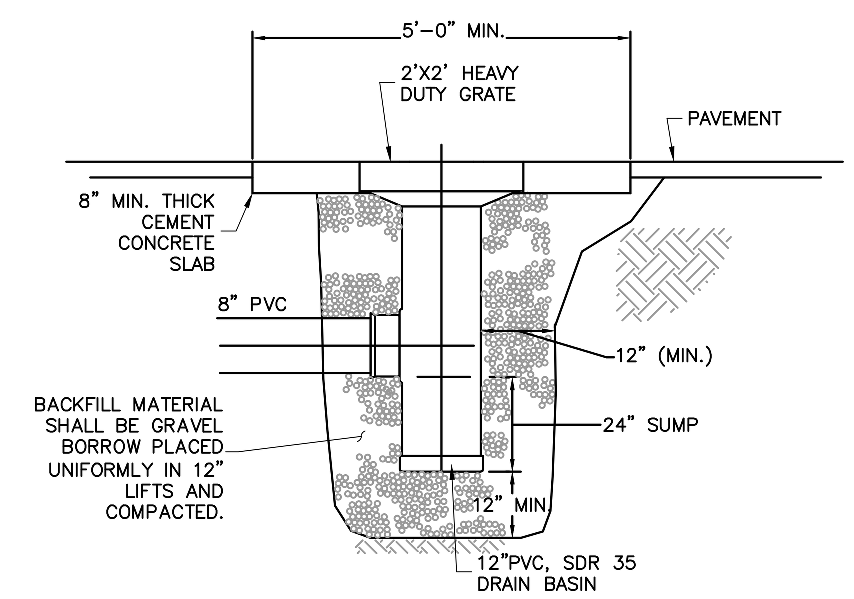

AREA DRAIN DETAIL
NOT TO SCALE

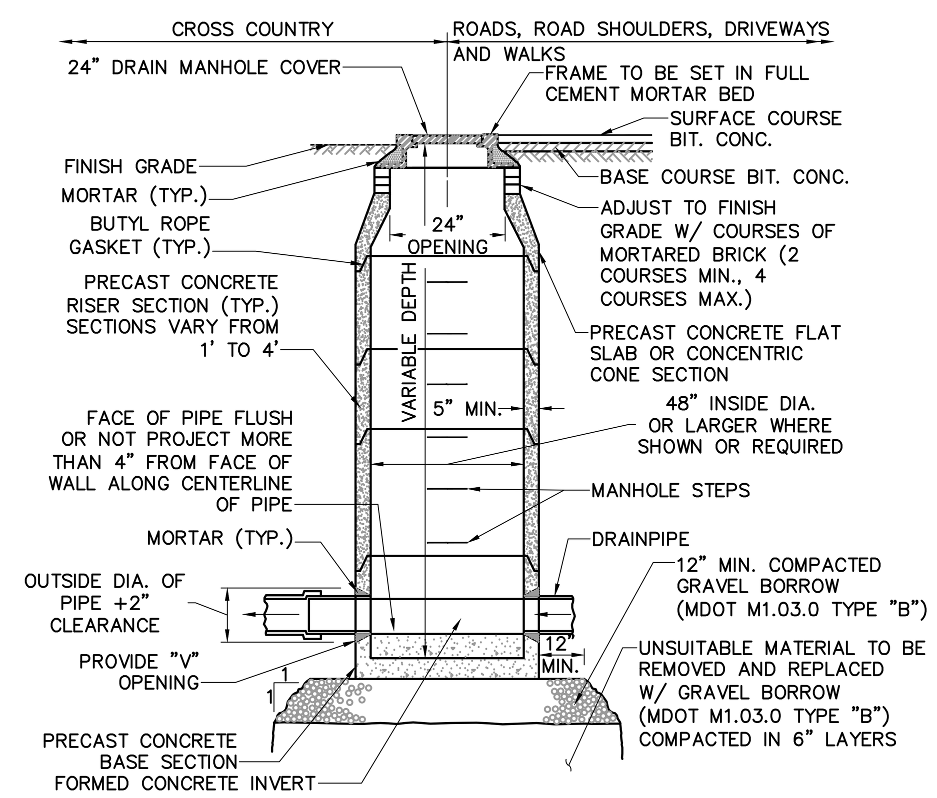

TYPICAL DRAIN MANHOLE DETAIL
NOT TO SCALE

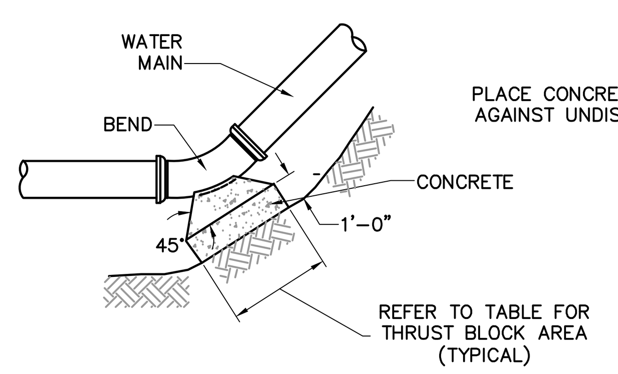

PLAN

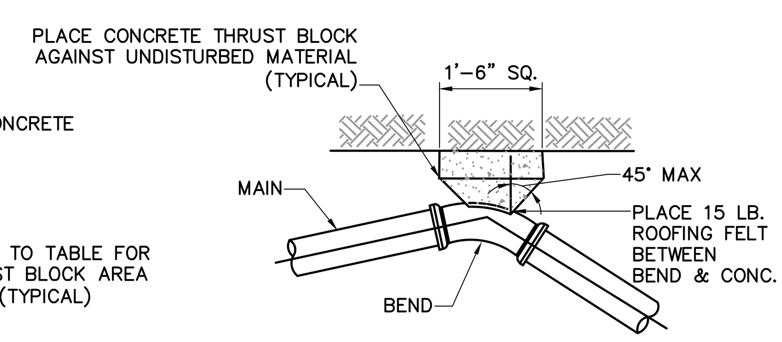

PLAN

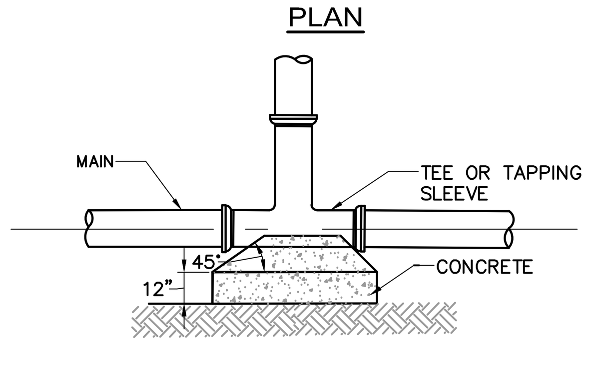

PLAN

NOTES:

1. THRUST BLOCKS TO BE USED ON ALL PRESSURE PIPES AT HORIZONTAL AND VERTICAL BENDS GREATER OR EQUAL TO 45°, TEES AND DEAD ENDS.
2. FOR FITTINGS WITH LESS THAN 45° DEFLECTION USE BEARING AREAS FOR 45° BEND.
3. BEARING AREAS BASED ON HORIZONTAL PASSIVE SOIL PRESSURE OF 2000 PSF AND A MINIMUM INTERNAL WATER PRESSURE OF 175 PSIG. JOINTS SHALL NOT BE ENCASED IN CONCRETE, BEARING AREAS MAY BE DISREGARDED FOR TRENCHES IN ROCK WHERE THE TOP OF THE ROCK FACE IS AT OR ABOVE THE CROWN OF THE PIPE. HOWEVER, CONCRETE BACKING SHALL BE PLACED BETWEEN THE PIPE AND ROCK FACE.

TABLE OF BEARING AREAS IN SQUARE FEET AGAINST UNDISTURBED MATERIAL FOR FITTING. *

SIZE OF MAIN (INCHES)	90° BEND (S.F.)	45° BEND (S.F.)	DEAD END (S.F.)
4	2.3	1.3	1.6
6	4.7	2.5	3.3
8	8.0	4.5	6.0
12	17.0	9.5	12.0

THRUST BLOCK DETAILS
NOT TO SCALE

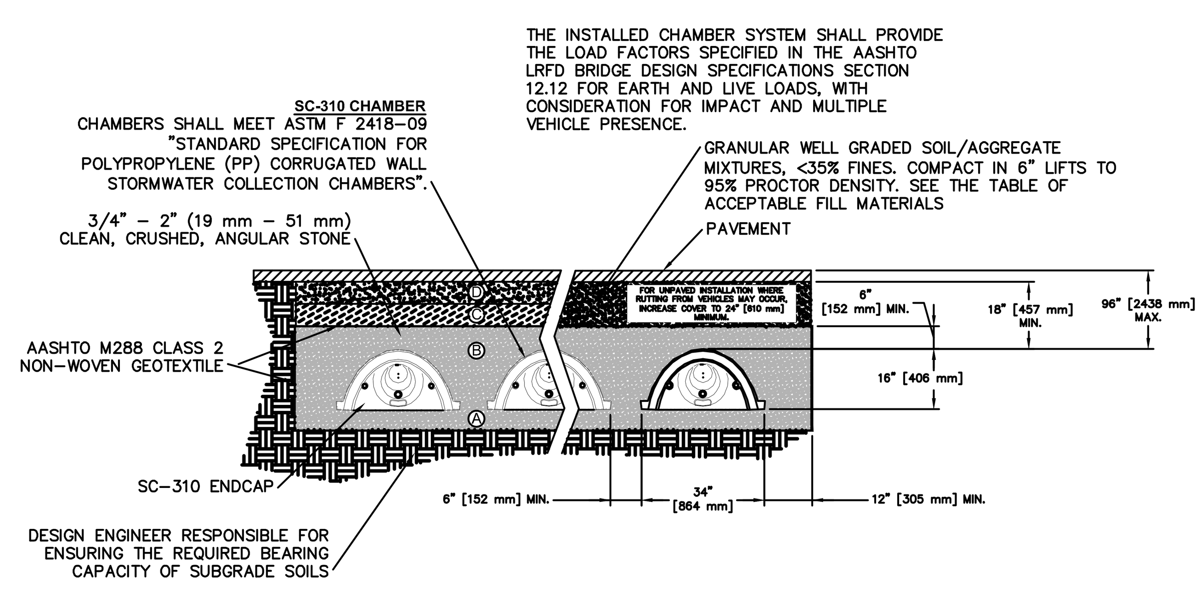

SC-310 STORMTECH CHAMBER
NOT TO SCALE

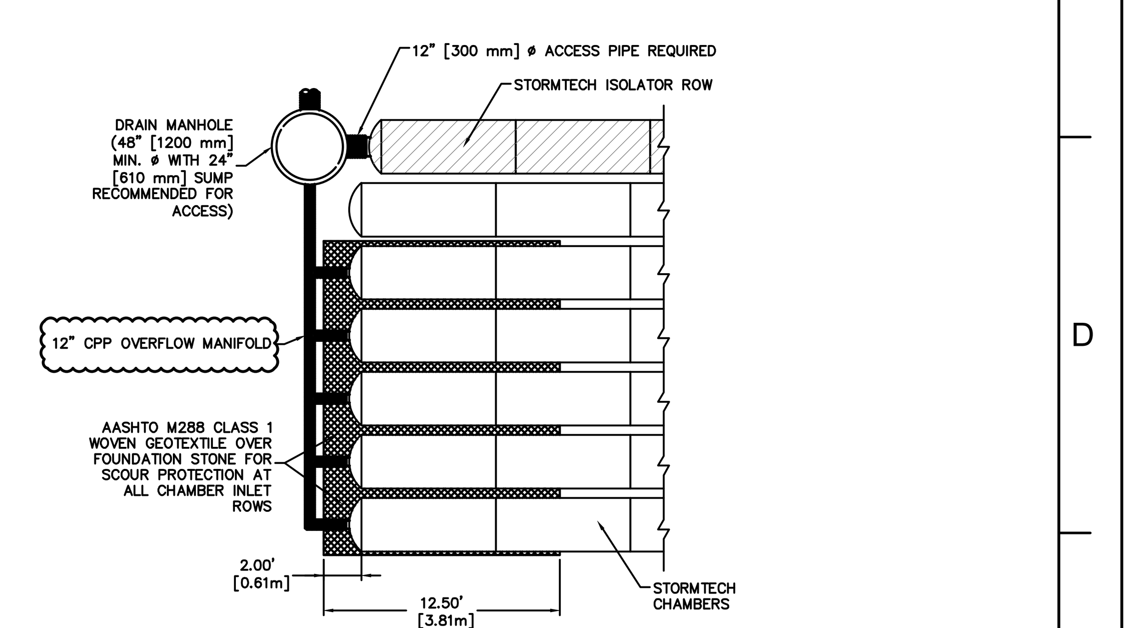

MANIFOLD DETAIL
NOT TO SCALE

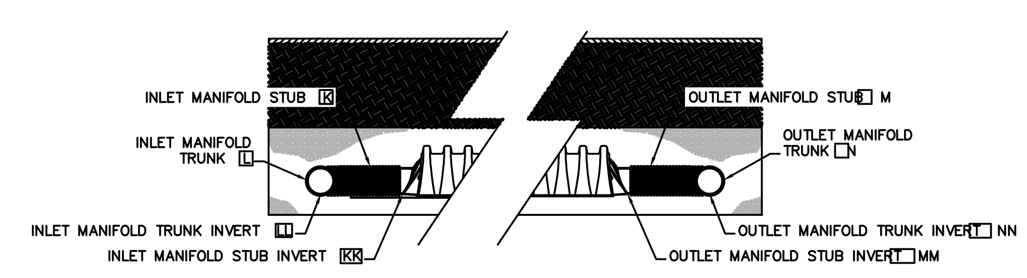

SC-310 STORMTECH CHAMBER
NOT TO SCALE

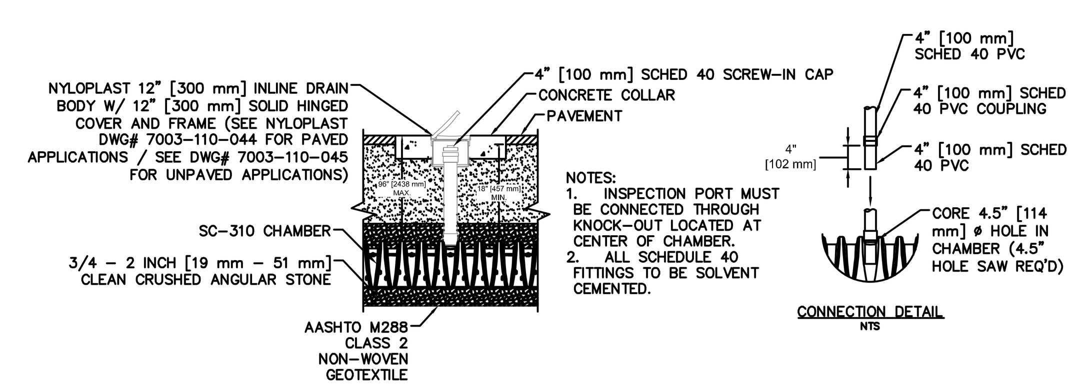

INSPECTION PORT
NOT TO SCALE

Nitsch Engineering
www.nitscheng.com
2 Center Plaza, Suite 430
Boston, MA 02108
T: (617) 338-0063
F: (617) 338-6472
► Civil Engineering
► Land Surveying
► Transportation Engineering
► Sustainable Site Consulting
► Planning
► GIS

ARCHITECTS • PROJECT MANAGERS
Newburyport, MA 01950
260 Merrimac Street, Bldg 7
P : 978.499.2999
F : 978.499.2944
Burlington, VT 05401
212 Battery Street
P : 802.863.1428
F : 802.863.6955
www.doreandwhittier.com
DORE & WHITTIER ARCHITECTS, INC.

Project No. 14-690

WESTFORD FIRE STATION
65 Boston Road
Westford, MA 01886

COPYRIGHT © 2014 by Dore & Whittier Architects Inc. (D&W). These documents are D&W's instruments of service and as such D&W retains all copyrights, common law and statutory rights. Use of these documents without D&W's express, written permission will result in copyright infringement.

SCHEMATIC DESIGN

REVISION:	Date:

DATE: 11/04/2015	SCALE: NTS
DRAWN BY: NAZ	CHK'D BY: Checker

SHEET TITLE:
SITE AND UTILITY DETAILS

SHEET #:
C.7

C:\Users\creardon\Documents\ARCH - 690 - WESTFORD FIRE STATION_creardon.rvt
11/2/2015 2:34:50 PM

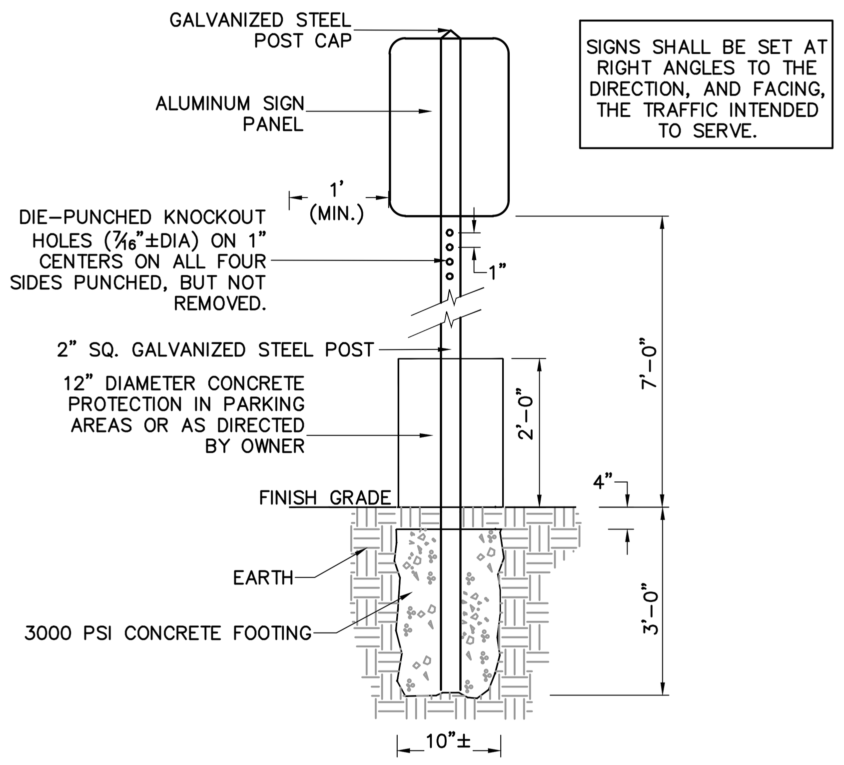

SIGN POST SETTING DETAIL
NOT TO SCALE
(SIGN PANEL UNDER 10 SF IN AREA)

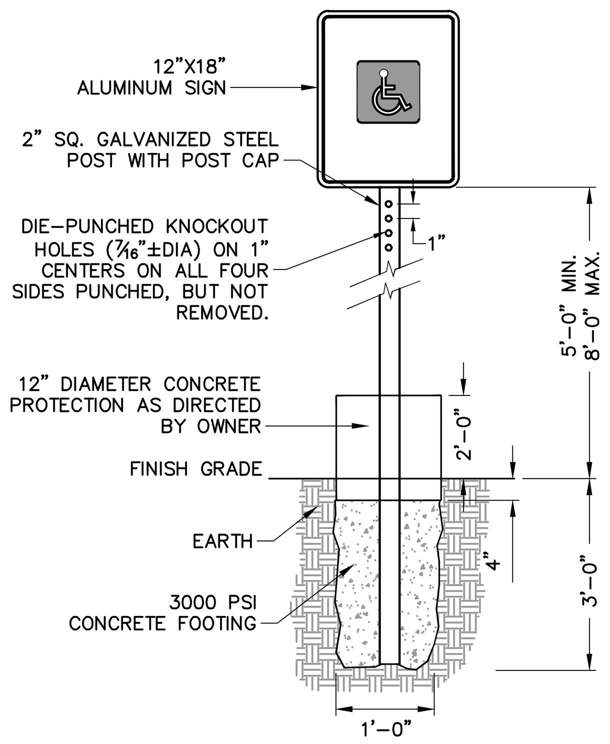

HANDICAPPED PARKING SIGNAGE DETAIL
NOT TO SCALE

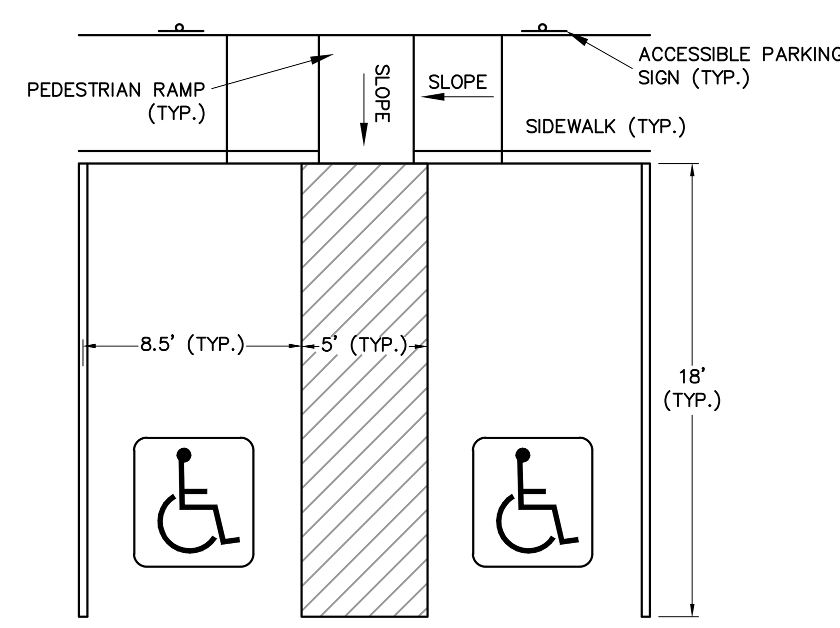

ACCESSIBLE PARKING DETAIL
NOT TO SCALE

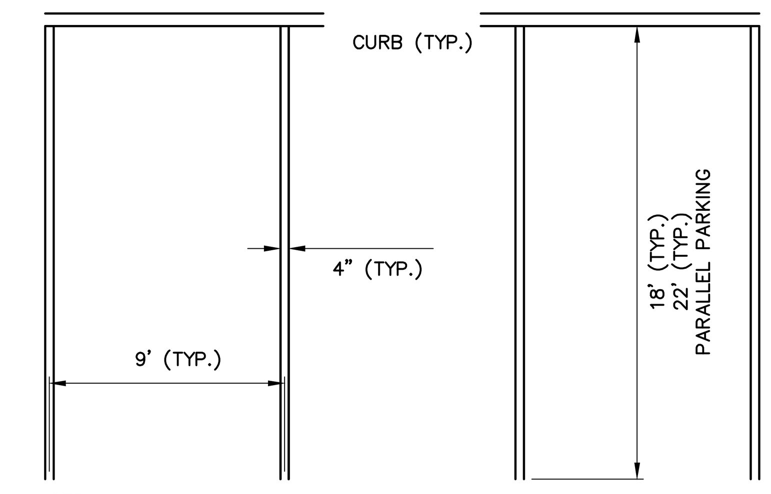

NOTE:
STRIPING SHALL BE INSTALLED PER SPECIFICATIONS

TYPICAL PARKING STRIPING DETAIL
NOT TO SCALE

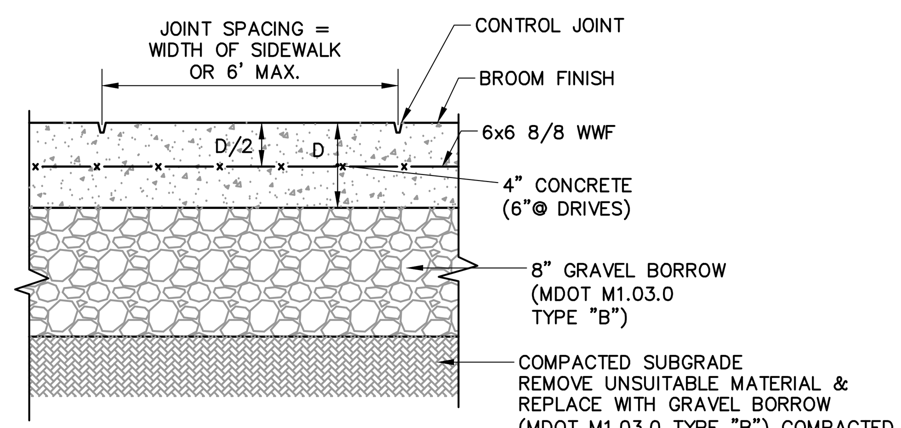

CONCRETE SIDEWALK DETAIL
NOT TO SCALE

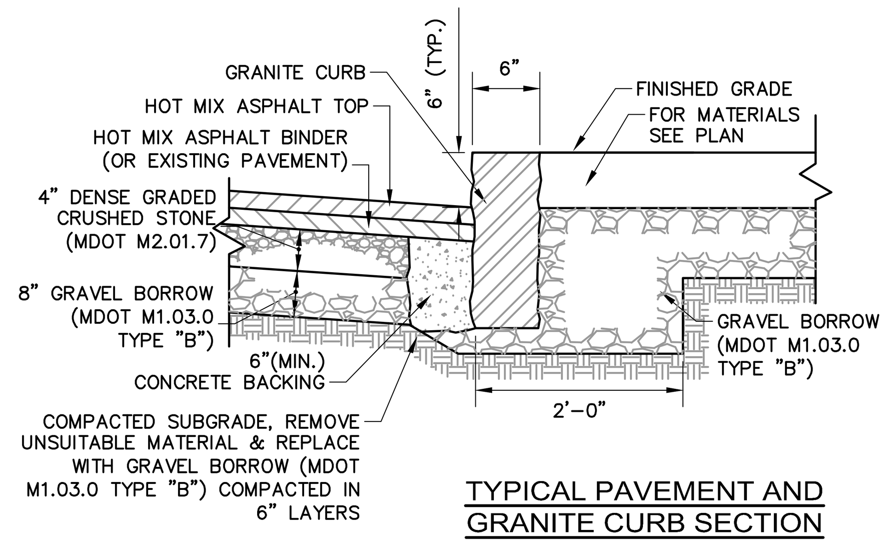

TYPICAL PAVEMENT AND GRANITE CURB SECTION DETAIL
NOT TO SCALE

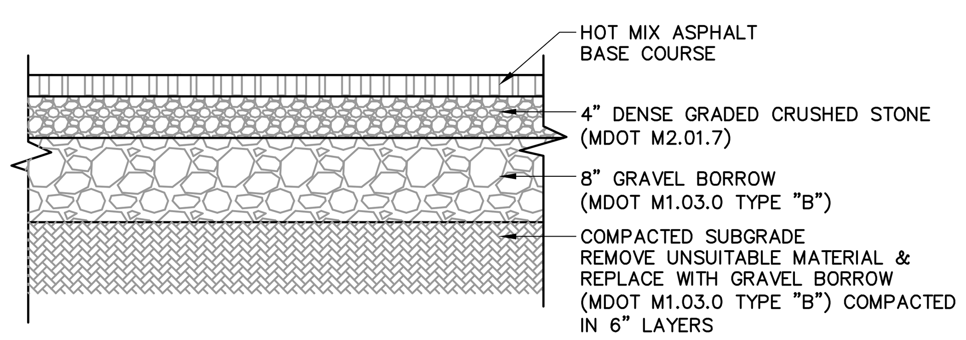

ASPHALTIC CONCRETE PAVING DETAIL
NOT TO SCALE

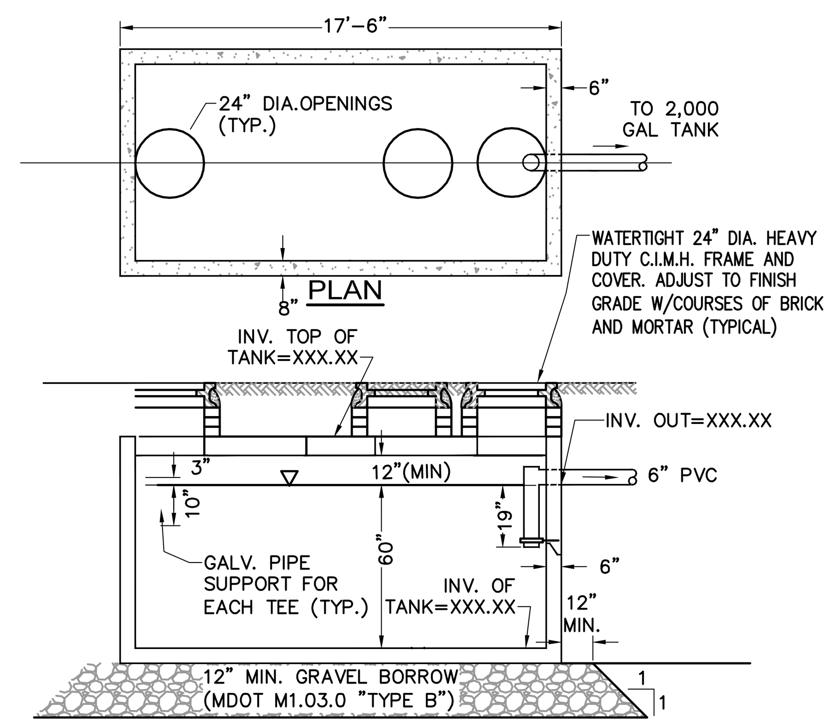

SPECIFICATIONS:

1. CONCRETE MINIMUM STRENGTH – 5,000 PSI @ 28 DAYS
2. STEEL REINFORCEMENT – ASTM A615 GR. 60, A185 OR A497 – 1" MIN. COVER
3. DESIGN LOADING – AASHTO HS20-44 – EARTH COVER 1 TO 5 FEET
4. CONSTRUCTION JOINT – SEALED WITH 1" DIA. BUTYL RUBBER OR EQUIVALENT
5. CONTRACTOR SHALL PROVIDE BUOYANCY CALCULATIONS STAMPED BY A MASSACHUSETTS PROFESSIONAL ENGINEER FOR ALL CONCRETE TANKS.
6. TANK SHALL BE VENTED IN ACCORDANCE WITH 310CMR 15.224
7. APPROXIMATE TOTAL WEIGHT OF TANK IS 48,770 LBS
9. USE TANK RISERS TO PROVIDE 1' MIN TO 3' MAX COVER OVER THE TOP OF THE TANKS
10. ALL PIPE PENETRATIONS SHALL BE BOOTED AND WATER TIGHT.
11. THE EXTERIOR SURFACES OF PRECAST CONCRETE STRUCTURES SHALL BE GIVEN TWO HEAVY COATS OF BITUMINOUS WATERPROOFING MATERIAL.

4,000 GALLON SEPTIC TANK
NOT TO SCALE

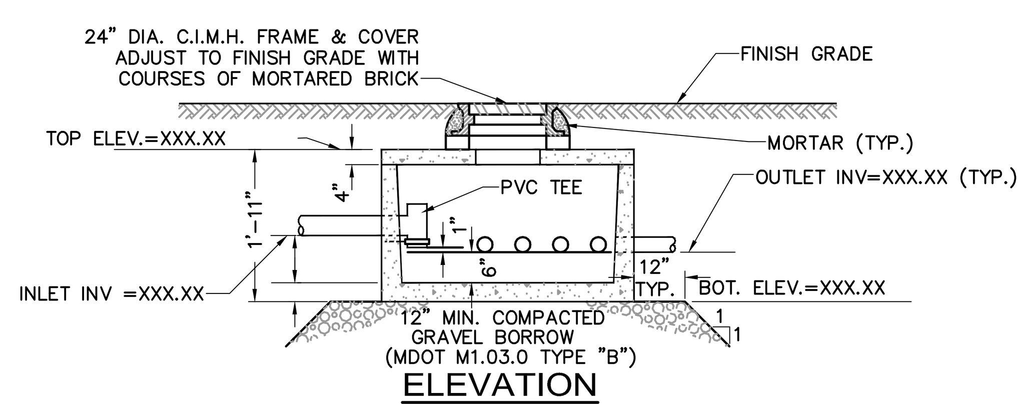

DISTRIBUTION BOX
NOT TO SCALE

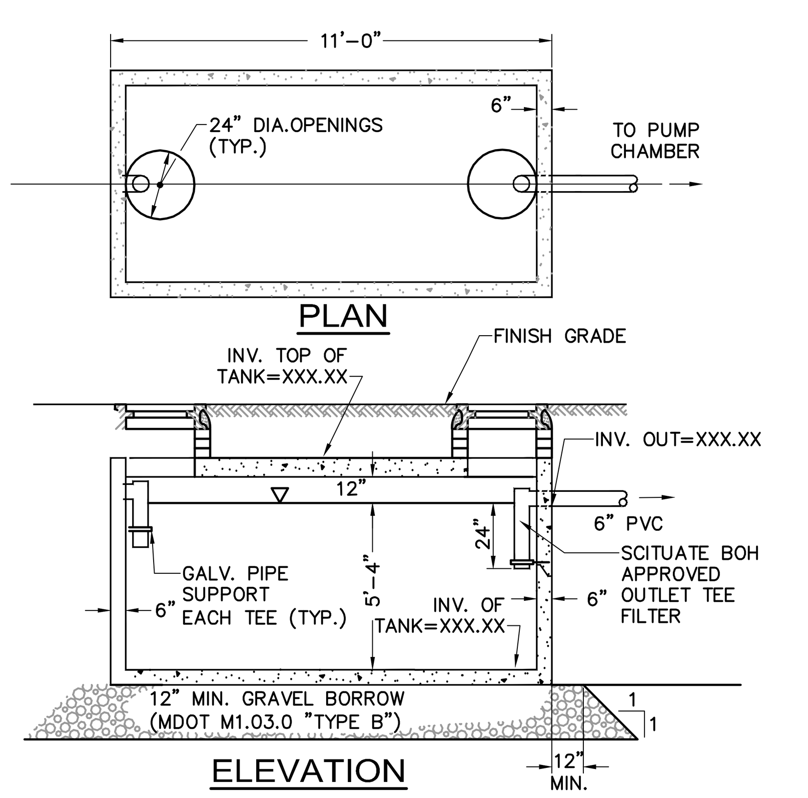

SPECIFICATIONS:

1. CONCRETE MINIMUM STRENGTH – 5,000 PSI @ 28 DAYS
2. STEEL REINFORCEMENT – ASTM A615 GR. 60, A185 OR A497 – 1" MIN. COVER
3. DESIGN LOADING – AASHTO HS20-44 – EARTH COVER 1 TO 5 FEET
4. CONSTRUCTION JOINT – SEALED WITH 1" DIA. BUTYL RUBBER OR EQUIVALENT
5. CONTRACTOR SHALL PROVIDE BUOYANCY CALCULATIONS STAMPED BY A MASSACHUSETTS PROFESSIONAL ENGINEER FOR ALL CONCRETE TANKS.
6. TANK SHALL BE VENTED IN ACCORDANCE WITH 310CMR 15.224
7. APPROXIMATE TOTAL WEIGHT OF TANK IS 48,770 LBS
9. USE TANK RISERS TO PROVIDE 1' MIN TO 3' MAX COVER OVER THE TOP OF THE TANKS
10. ALL PIPE PENETRATIONS SHALL BE BOOTED AND WATER TIGHT.
11. THE EXTERIOR SURFACES OF PRECAST CONCRETE STRUCTURES SHALL BE GIVEN TWO HEAVY COATS OF BITUMINOUS WATERPROOFING MATERIAL.

2000 GALLON SEPTIC TANK
NOT TO SCALE

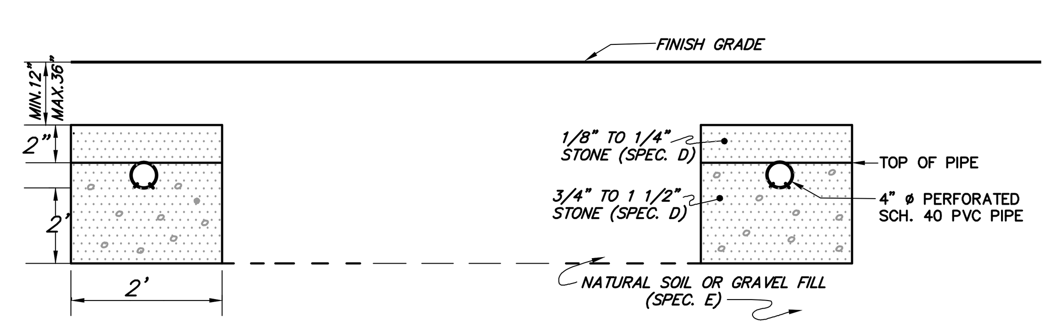

WIDTH . X'-X".
LENGTH . XX'-X".
DEPTH . X'-X".
TOTAL LINEAR FT.

TYPICAL SECTION
LEACH TRENCH

NOTES & SPECIFICATIONS

1. ALL SETBACKS AND CONSTRUCTION SHALL CONFORM TO THE REQUIREMENTS OF THE STATE ENVIRONMENTAL CODE TITLE 5 310CMR 15.000.

2. CONTRACTOR SHALL SET 2 TEMPORARY BENCHMARKS WITHIN 75 FEET OF LEACHING AREA PRIOR TO START OF CONSTRUCTION.

3. ALL WASHED STONE AROUND THE LEACHING TRENCHES SHALL CONSIST OF DOUBLE WASHED STONE RANGING FROM 3/4 – 1-1/2 INCHES IN SIZE AND MUST BE FREE OF IRON, FINES, AND DUST IN PLACE. ALL STONE MUST HAVE LESS THAN 0.2 PERCENT MATERIAL FINER THAN A NUMBER 200 SIEVE AS DETERMINED BY THE AASHTO TEST METHODS T-11 AND T-27 (LATEST EDITION). THE CONTRACTOR SHALL PROVIDE A GRAIN SIZE ANALYSIS TO THE ENGINEER PRIOR TO THE PLACEMENT OF THE STONE.

4. ANY SMEARED OR COMPACTED SURFACES IN THE EXCAVATION SHALL BE RAKED TO A DEPTH OF ONE INCH, AND LOOSE MATERIAL REMOVED, BEFORE THE LATERALS AND STONE ARE PLACED. ALL UNSUITABLE MATERIAL WITHIN 5'-0" OF THE LEACHING TRENCHES SHALL BE REMOVED.

5. OPEN TRENCHES SHALL BE PROTECTED WITH STRAW BALES AND/OR SILT FENCING TO PREVENT SURFACE RUNOFF, SILT AND DEBRIS FROM ENTERING THE TRENCH.

6. THE MINIMUM DEPTH OF COVER MATERIAL OVER LEACHING FACILITIES SHALL BE 9 INCHES PLUS TOPSOIL. EARTH MATERIALS USED TO COVER LEACHING FACILITIES SHALL BE FREE OF FINES, STUMPS AND WASTE CONSTRUCTION MATERIALS. THE MAXIMUM DEPTH OF COVER OVER LEACHING TRENCHES SHALL BE 36".

7. FINISHED SURFACE AREAS SHALL HAVE A MINIMUM SLOPE OF 2%, BE LOAMED (4-INCH MINIMUM) AND SEEDED, AND MAINTAINED UNTIL ESTABLISHED.

8. SOLID PVC PIPE AND FITTINGS SHALL BE TIGHT JOINTED SCHEDULE 40, THAT MEET ASTM #D2729 AND #D3034.

9. DISTRIBUTION LINES SHALL BE 4" PERFORATED SCHEDULE 40 PVC.

10. THE BOTTOM OF THE LEACHING TRENCHES SHALL BE SET LEVEL FOR THEIR ENTIRE LENGTH.

11. MACHINERY WHICH MAY CRUSH OR DISTURB THE ALIGNMENT OF THE PIPE IN THE DISPOSAL SYSTEM SHALL NOT BE ALLOWED ON ANY PART OF THE DISPOSAL AREA.

12. AN AS-BUILT BY A PROFESSIONAL ENGINEER SHALL BE PREPARED AND SUBMITTED TO WESTFORD BOARD OF HEALTH. THE AS-BUILT SHALL MEET THE REQUIREMENTS OF TITLE 5.

13. NO PERMANENT STRUCTURE SHALL BE CONSTRUCTED OVER THE LEACHING FACILITY.

14. TEST PIT LOGS AND PERCOLATION TESTING WERE PERFORMED BY NITSCH ENGINEERING, INC. AND WITNESSED BY DAN SMITH, PE, PLS OF WESTFORD ENGINEERING DEPARTMENT. ALL PERCOLATION TESTS WERE PERFORMED IN ACCORDANCE WITH THE REGULATIONS OF TITLE V (310 CMR 15.000) OF THE MASSACHUSETTS STATE ENVIRONMENTAL CODE. FOR SOIL TEST DATA SEE SHEET C3.0.

15. SEPTIC SYSTEM DESIGN IS BASED ON SUBSURFACE SOIL AND GROUNDWATER CONDITIONS OBSERVED AT THE TEST PIT LOCATIONS ONLY. CONDITIONS MAY VARY AT LOCATIONS NOT INVESTIGATED BY TEST PITS OR IN THE CASE OF GROUNDWATER LEVELS WITH SEASONAL FLUCTUATIONS. SHOULD THIS BECOME EVIDENT DURING CONSTRUCTION, THE ENGINEER SHOULD BE NOTIFIED SINCE A REEVALUATION OF THE DESIGN MAY BE NECESSARY.

16. ALL TOPSOIL, AND DELETERIOUS MATERIAL IN AND WITHIN 5± FEET OF THE PROPOSED LEACHING FACILITY SHALL BE STRIPPED AND REPLACED WITH A CLEAN SAND OR GRAVEL FILL MATERIAL HAVING A 2 MPI PERCOLATION RATE OR LESS BEFORE AND AFTER PLACEMENT. ALL FILL MATERIAL SHALL CONFORM TO 310 CMR 15.255(3). A SIEVE ANALYSIS OF THE MATERIAL BROUGHT ON SITE SHALL BE PERFORMED PURSUANT TO 15.255(3) TO VERIFY COMPLIANCE.

17. THE CONTRACTOR SHALL REPLACE ALL DISTURBED PAVING AND WALKWAYS IN-KIND.

18. THE CONTRACTOR SHALL MAINTAIN SEWAGE COLLECTION AND DISPOSAL FOR ALL FACILITIES INVOLVED IN THIS PROJECT EITHER THROUGH PUMPING, HAULING OPERATIONS OR OTHER MEANS. SEWAGE DISPOSAL SHALL NOT BE INTERRUPTED AT ANY TIME.

20. THE CONTRACTOR MUST OBTAIN A DISPOSAL SYSTEM INSTALLER'S PERMIT FROM THE TOWN OF WESTFORD PRIOR TO INSTALLATION OF ANY COMPONENT OF THE SEWAGE DISPOSAL SYSTEM.

21. ALL SYSTEM COMPONENTS SHALL BE MARKED WITH MAGNETIC MARKING TAPE OR A COMPARABLE MEANS IN ORDER TO LOCATE THEM ONCE BURIED.

22. PAVEMENT RESTORATION MUST MEET TOWN OF WESTFORD DEPARTMENT OF PUBLIC WORKS (DPW) STANDARDS.

23. A STREET OPENING PERMIT MUST BE OBTAINED FROM THE TOWN OF WESTFORD DPW.

24. ELECTRICAL WORK MUST BE COMPLETED BY A LICENSED ELECTRICIAN, WHO MUST RECEIVE A PERMIT AND HAVE WORK INSPECTED AND APPROVED BY THE WESTFORD WIRING INSPECTOR.

25. REMOVE AND REPLACE A & B HORIZONS WITHIN 5-FEET OF THE SEPTIC ABSORPTION SYSTEM.

Nitsch Engineering
www.nitscheng.com
2 Center Plaza, Suite 430
Boston, MA 02108
T: (617) 338-0063
F: (617) 338-6472
► Civil Engineering
► Land Surveying
► Transportation Engineering
► Sustainable Site Consulting
► Planning
► GIS

ARCHITECTS • PROJECT MANAGERS
DORE & WHITTIER ARCHITECTS, INC.
www.doreandwhittier.com

Project No. 14-690

WESTFORD FIRE STATION
65 Boston Road
Westford, MA 01886

SCHEMATIC DESIGN

REVISION:	Date:

DATE: 11/04/2015	SCALE: NTS
DRAWN BY: NAZ	CHK'D BY: Checker

SHEET TITLE: SITE AND SEPTIC DETAILS

SHEET #: C.8

11/2/2015 2:34:50 PM C:\Users\creardon\Documents\ARCH - 690 - WESTFORD FIRE STATION_creardon.rvt

ABBREVIATIONS

A

ABV	ABOVE
AFF	ABOVE FINISH FLOOR
ASC	ABOVE SUSPENDED CEILING
ACC	ACCESS(ORY)
ACFL	ACCESSIBLE FLOOR
AP	ACCESS PANEL
AC	ACOUSTICAL
ACP	ACOUSTICAL CEILING PANEL
ACPL	ACOUSTICAL PLASTER
ACT	ACOUSTIC TILE
AWP	ACOUSTIC WALL PANEL
ACR	ACRYILIC PLASTER
AD	ADDENDUM
ADDN	ADDITION
ADH	ADHESIVE
ADJ	ADJACENT
ADJT	ADJUSTABLE
AGG	AGGREGATE
AIB	AIR INFILTRATION BARRIER
A/C	AIR CONDITIONING
ALT	ALTERNATE
AL	ALUMINUM
AB	ANCHOR BOLT
ANC	ANCHOR, ANCHORAGE
ANOD	ANODIZED
APX	APPROXIMATE
ARCH	ARCHITECT(URAL)
AD	AREA DRAIN
ASB	ASBESTOS
ASP	ASPHALT
ACCMP	ASPHALT COATED CORRUGATED METAL PIPE
AT	ASPHALT TILE
AV	AUDIOVISUAL
AUTO	AUTOMATIC

B

BR	BACKER ROD
BAR	BARRIER
BB	BASEBOARD
BSMT	BASEMENT
BRG	BEARING
BPL	BEARING PLATE
BJT	BED JOINT
BM	BENCH MARK
BET	BETWEEN
BVL	BEVELED
BIT	BITUMINOUS
BLK	BLOCK
BLKG	BLOCKING
BLU	BLUE STONE
BD	BOARD
BL	BORROWED LITE
BS	BOTH SIDES
BW	BOTH WAYS
BOT	BOTTOM
B/O	BOTTOM OF
BOD	BOTTOM OF DECK
BRK	BRICK
BRZ	BRONZE
BLDG	BUILDING
BN	BULLNOSE

C

CAB	CABINET
CUH	CABINET UNIT HEATER
CPT	CARPET (ED)
CSMT	CASEMENT
CIPC	CAST IN PLACE CONCRETE
CIPC	CAST IRON
CST	CAST STONE
CB	CATCH BASIN
CLG	CEILING
CHT	CEILING HEIGHT
CEM	CEMENT
C/C	CENTER TO CENTER
CM	CENTIMETER (S)
CER	CERAMIC
CMT	CERAMIC MOSAIC TILE
CT	CERAMIC TILE
CBD	CHALKBOARD
CHAM	CHAMFER
CHGTB	CHANGING TABLE
CH	CHEMICAL HARDENER
CLD	CHILD
CIR	CIRCLE
CIRC	CIRCUMFERENCE
CR	CLASSROOM
CLR	CLEAR (ANCE)
CL	CLOSET
CLS	CLOSURE
CFMF	COLD FORMED METAL FRAME
COL	COLUMN
COMB	COMBINATION
COMBST	COMBUSTIBLE (COMBUSTION)
CMPT	COMPARTMENT
COMPO	COMPOSITION (COMPOSITE)
COMPO	COMPRESS (ED), (ION), (IBLE), COMPUTER
CONC	CONCRETE
CMU	CONCRETE MASONRY UNIT
COND	CONDUCTOR
CONF	CONFERENCE
CX	CONNECTION
CONST	CONSTRUCTION
CONT	CONTINUOUS OR CONTINUE
CONTR	CONTRACT (OR)
CLL	CONTRACT LIMIT LINE
CJT	CONTROL JOINT
CVTR	CONVECTOR
CPR	COPPER
CG	CORNER GUARD
CORR	CORRIDOR
CRG	CORRUGATED
CMP	CORRUGATED METAL PIPE
CTR	COUNTER
CFL	COUNTER FLASHING
CTSK	COUNTER SUNK SCREW
CS	COUNTERSINK
CRS	COURSE (S)
CVR	COVER
CRG	CROSS GRAIN
CFT	CUBIC FOOT
CW	CURTAIN WALL

D

DPR	DAMPER
DP	DAMPROOFING
DL	DEAD LOAD
DFL	DEFLECTION
DEMO	DEMOLISH, DEMOLITION
DMT	DEMOUNTABLE
DEP	DEPRESSED
D	DEPTH
DET	DETAIL
DIAG	DIAGONAL
DIAG	DIAMETER
DIM	DIMENSION
DISP	DISPENSER
DIV	DIVISION
DR	DOOR
DO	DOOR OPENING, DITTO
DH	DOUBLE HUNG
DA	DOUBLEACTING
DTS	DOVETAIL ANCHOR SLOT
DN	DOWN
DS	DOWNSPOUT
DT	DRAIN TILE
DRB	DRAINBOARD
DRW	DRAWER
DWG	DRAWING (S)
DFL	DRINKING FOUNTAIN
DW	DUMBWAITER

E

EA	EACH
EF	EACH FACE
E	EAST
EOS	EDGE OF STEEL
ED	EDUCATION
ELEC	ELECTRIC (AL)
EWC	ELECTRIC WATER COOLER
EP	ELECTRICAL PANEL
EL	ELEVATION
ELEV	ELEVATOR
EMER	EMERGENCY
ESB	ENCLOSED STEEL BEAM
ENC	ENCLOSURE
ENTR	ENTRANCE
EPT	EPOXY PAINT
EQ	EQUAL
EQP	EQUIPMENT
ESC	ESCALATOR
EST	ESTIMATE
EXC	EXCAVATE
EXH	EXHAUST
EXG	EXISTING
EXMP	EXPANDED METAL PLATE
EXPN	EXPANSION
EB	EXPANSION BOLT
EJT	EXPANSION JOINT
EXP	EXPOSED
EXT	EXTERIOR
EFS	EXTERIOR FINISH SYSTEM
EIFS	EXTERIOR INSULATED FINISH SYSTEM
EXS	EXTRA STRONG

F

FWC	FABRIC WALL COVERING
FAB	FABRICATE (ION)
FB	FACE BRICK
F/O	FACE OF
FOW	FACE OF WALL
FF	FACTORY FINISH
FM	FACTORY MUTUAL
FCU	FAN COIL UNIT
FAS	FASTEN, FASTENER
FN	FENCE
FBD	FIBERBOARD
FGL	FIBERGLASS
FRP	FIBERGLASS REINFORCED PLASTIC
FIN	FINISH (ED)
FFE	FINISH FLOOR ELEVATION
FFL	FINISH FLOOR LINE
FTR	FINNED TUBE RADIATION
FA	FIRE ALARM, FRESH AIR
FAP	FIRE ANNUNCIATOR PANEL
FBRK	FIRE BRICK
FE	FIRE EXTINGUISHER
FE&C	FIRE EXTINGUISHER AND CABINET
FE&RC	FIRE EXTINGUISHER AND RATED CABINET
FHC	FIRE HOSE CABINET
FHS	FIRE HOSE STATION
FPL	FIRE PLACE
FP	FIRE PROOF (ING)
FPC	FIRE PROTECTION SYSTEM CONTRACTOR
FR	FIRE RATED (ING), FRAME (D), (ING)
FRC	FIRE RESISTANT COATING
FRJS	FIRE RESISTIVE JOINT SEALANT
FRT	FIRE RETARDANT TREATED
FRTW	FIRE RETARDANT TREATED WOOD
FXT	FIXTURE
FLAM	FLAMMABLE
FLSH	FLASHING
FHMS	FLATHEAD MACHINE SCREW
FHWS	FLATHEAD WOOD SCREW
FLEX	FLEXIBLE
FL	FLOOR (ING)
FLCO	FLOOR CLEANOUT
FD	FLOOR DRAIN
FPL	FLOOR PLATE
FLUR	FLUORESCENT
FT	FOOT, FEET
FTG	FOOTING
FRG	FORGED
FDN	FOUNDATION
FR	FRAME (D), (ING), FIRE RATED (ING)
FA	FRESH AIR, FIRE ALARM
FS	FULL SIZE
FBO	FURNISHED BY OTHERS, BY OWNER
FURN	FURNISHED, FURNITURE
FURN	FURRED (ING)
FUT	FUTURE

G

GA	GAGE, GAUGE
GV	GALVANIZED
GI	GALVANIZED IRON
GP	GALVANIZED PIPE
GKT	GASKET (ED)
GC	GENERAL CONTRACT (OR)
GLB	GLASS BLOCK
GLF	GLASS FIBER
GL	GLASS GLAZING
GCT	GLAZED CERAMIC TILE
GCMU	GLAZED CONCRETE MASONRY UNITS
GST	GLAZED STRUCTURAL TILE
GB	GRAB BAR
GD	GRADE, GRADING
GRN	GRANITE
GCB	GROUND FACE CONCRETE BLOCK
GT	GROUT
GTR	GUTTER
GYP	GYPSUM
GPL	GYPSUM LATH
GPPL	GYPSUM PLASTER
GPT	GYPSUM TILE
GWB	GYPSUM WALL BOARD

H

HD	HAND DRYER (HAIR DRYER)
HC	HANDICAPPED, HOLLOW CORE
HDB	HARDBOARD
H&S	HARDENER AND SEALER
HDWD, HDW	HARDWARE
HWD	HARDWOOD
HJT	HEAD JOINT
HDR	HEADER
HGLR	HEAT, GLARE, LIGHT REDUCING GLASS
HTG	HEATING
HVAC	HEATING/VENTILATION/AIR CONDITIONING
HT	HEIGHT
HX	HEXAGONAL
HES	HIGH EARLY-STRENGTH CEMENT
HDC	HOLD DOWN CLIPS
HLD	HOLDERS
HC	HOLLOW CORE, HANDICAPPED
HM	HOLLOW METAL
HORIZ	HORIZONTAL
HS	HORIZONTAL METAL SIDING
HB	HOSE BIB
HWH	HOT WATER HEATER
HR	HOUR

I

IMPG	IMPREGNATED
INCIN	INCINERATOR
INCL	INCLUDE (D), (ING)
ID	INSIDE DIAMETER / INSIDE DIMENSION
ICS	INSULATED COMPOSITE SIDING
INSF	INSULATED FILL
IG	INSULATED GLASS
INS	INSULATION (D), (ION)
INT	INTERIOR
INTM	INTERMEDIATE
ISFP	INTUMESCENT SPRAY-ON FIREPROOFING
INV	INVERT
IE	INVERT ELEVATION
IPS	IRON PIPE SIZE

J

JAN	JANITOR
JC	JANITOR'S CLOSET
JT	JOINT
JF	JOINT FILLER
J	JOIST

K

KPL	KICKPLATE
KIT	KITCHEN
KO	KNOCK (ED) OUT

L

LBL	LABEL
LAB	LABORATORY
LAD	LADDER
LB	LAG BOLT
LAM	LAMINATE (D)
LAV	LAVATORY
LH	LEFT HAND
L	LENGTH
LT	LIGHT (ING)
LC	LIGHT CONTROL
LP	LIGHT PROOF
LW	LIGHT WEIGHT
LWC	LIGHTWEIGHT CONCRETE
LMS	LIMESTONE
LF	LINEAL FEET
LIN	LINOLEUM
LTL	LINTEL
LL	LIVE LOAD
LKRC	LOCKER COLOR
LVR	LOUVER
LPT	LOW POINT

M

MACH	MACHINE
MAG	MAGNETIC
MDH	MAGNETIC DOOR HOLDER
MH	MANHOLE, MOP HOLDER
MFR	MANUFACTURE (R)
MRB	MARBLE
MB	MARKER BOARD
MAS	MASONRY
MO	MASONRY OPENING
MAT	MATERIAL (S)
MAX	MAXIMUM
MECH	MECHANICAL
MC	MEDICINE CABINET
MED	MEDIUM
MDF	MEDIUM DENSITY FIBERBOARD
MDO	MEDIUM DENSITY OVERLAY
MBR	MEMBER
MMB	MEMBRANE
MTL	METAL
MFD	METAL FLOOR DECK
MTFR	METAL FURRING
MPS	METAL PANEL SYSTEM
MRD	METAL ROOF DECK
MTHR	METAL THRESHOLD
MWS	METAL WINDOW SYSTEM
M	METER (S)
MEZZ	MEZZANINE
MS	MIDDLE SCHOOL
MM	MILLIMETER (S)
MWK	MILLWORK
MIN	MINIMUM
MIR	MIRROR
MISC	MISCELLANEOUS
MOD	MODULE
MRG	MOISTURE RESISTANT GYPSUM WALLBOARD
MR	MOISTURE RETARDENT
MLD	MOLDING, MOULDING
MH	MOP HOLDER, MANHOLE
MTD, MTG	MOUNT (ED), (ING)
MOV	MOVABLE
MULL	MULLION
MCWF	MULTI COLOR WALL FINISH

N

NL	NAILABLE
NAT	NATURAL
NR	NOISE REDUCTION
NRC	NOISE REDUCTION COEFFICIENT
NOM	NOMINAL
NS	NON SLIP
NMT	NONMETALLIC
N	NORTH
NE	NORTHEAST
NW	NORTHWEST
NA	NOT APPLICABLE
NIC	NOT IN CONTRACT
NTS	NOT TO SCALE
NO	NUMBER

O

OBS	OBSCURE
OFF	OFFICE
OC	ON CENTER (S)
OP	OPAQUE
OWJ	OPEN WEB JOIST
OPNG	OPENING
OPP	OPPOSITE
OPPH	OPPOSITE HAND
OSB	ORIENTED STRAND BOARD
OZ	OUNCE
OD	OUTSIDE DIAMETER / OUTSIDE DIMENSION
OA	OVERALL
OH	OVERHEAD
OHDR	OVERHEAD DOOR

P

PT	PAINT (ED), POINT
PS	PAINTED STEEL
PR	PAIR
PNL	PANEL
PB	PANIC BAR
PTD	PAPER TOWEL DISPENSER
PAR	PARALLEL
PKG	PARKING
PBD	PARTICLE BOARD
PTN	PARTITION
P&M	PATCH AND MATCH
PV	PAVE (D), (ING)
PVMT	PAVEMENT
PERF	PERFORATE (D)
PERI	PERIMETER
PERM	PERMANENT
PERP	PERPENDICULAR
PC	PIPE CHASE
PL	PLASTER, PROPERTY LINE, PLASTIC, PLATE
PLAM	PLASTIC LAMINATE
PL	PLASTIC, PLATE, PROPERTY LINE, PLASTER
PG	PLATE GLASS
PL	PLATE, PLASTIC, PROPERTY LINE, PLASTER
PLMB	PLUMBING
PWD	PLYWOOD
PT	POINT, PAINT (ED)
POLY	POLYETHYLENE
PISO	POLYISOCIANURATE
POLYUR	POLYURETHANE
PVC	POLYVINYL CHLORIDE
PCT	PORCELAIN CERAMIC TILE
PE	PORCELAIN ENAMEL
PCF	POUNDS PER CUBIC FOOT
PLF	POUNDS PER LINEAR FOOT
PSF	POUNDS PER SQUARE FOOT
PSI	POUNDS PER SQUARE INCH
PAF	POWDER ACTUATED FASTENER
PCC	PRECAST CONCRETE
PFB	PREFABRICATED
PFN	PREFINISHED
PMF	PREFINISHED METAL FASCIA
PRF	PREFORMED
PMS	PREFORMED METAL SIDING
PK	PRE-KINDERGARTEN
PPT	PRESSURE PRESERVATIVE TREATED
PSC	PRESTRESSED CONCRETE
PROJ	PROJECT, PROJECTION
PL	PROPERTY LINE, PLASTIC, PLATE, PLASTER

Q

QTY	QUANTITY
QT	QUARRY TILE

R

RBT	RABBET, REBATE
RAD	RADIATOR
R	RADIUS
RL	RAIL (ING)
RWC	RAINWATER CONDUCTOR
RRT	RAISED RUBBER TILE
RBT	REBATE, RABBET
RCV	RECEIVE (D)
RECT	RECTANGULAR
REF	REFERENCE
RFL	REFLECT (ED), (IVE), (OR)
RCP	REFLECTED CEILING PLAN
REFG	REFRIGERATOR
REG	REGISTER
RGWB	REINFORCED GYPSUM WALL BOARD
REM	REMOVE
RENOV	RENOVATION
REQ	REQUIRED
RESL	RESILIENT
RB	RESILIENT BASE
RET	RETURN
RA	RETURN AIR
RVS	REVERSE (SIDE)
REV	REVISION (S), REVISED
RH	RIGHT HAND
ROW	RIGHT OF WAY
RSR	RISER
RVT	RIVET
RD	ROOF DRAIN
RM	ROOM
RO	ROUGH OPENING
RBR	RUBBER
RFL	RUBBER FLOORING
RT	RUBBER TILE
RBL	RUBBLE STONE

S

SFGL	SAFETY GLASS
SND	SANITARY NAPKIN DISPOSAL
SNV	SANITARY NAPKIN VENDOR
SCH	SCHEDULE
SCN	SCREEN
SLNT	SEALANT
S&BR	SEALANT AND BACKER ROD
SLR	SEALER
SJT	SEISMIC JOINT
SJC	SEISMIC JOINT COVER
SHTG	SHEATHING
SG	SHEET GLASS
SHL	SHELF, SHELVING
SHO	SHORE, (D), (ING)
SIM	SIMILAR
SOH	SIMILAR / OPPOSITE HAND
SPMR	SINGLE PLY MEMBRANE ROOF
SKL	SKYLIGHT
SL	SLEEVE
SD	SOAP DISH, STORM DRAIN
SC	SOLID CORE
STC	SOUND TRANSMISSION COEFFICIENT
SPMR	SOUNDPROOF
S	SOUTH
SE	SOUTHEAST
SW	SOUTHWEST
SPC	SPACER
SPK	SPEAKER
SPL	SPECIAL
SPEC	SPECIFICATION (S)
SFCB	SPLITFACE CONCRETE BLOCK
SFP	SPRAY - APPLIED FIREPROOFING
SPR	SPRINKLER
SQ	SQUARE
SF	SQUARE FEET
SS	STAINLESS STEEL
STD	STANDARD
SSMR	STANDING SEAM METAL ROOFING
STA	STATION
STL	STEEL
STO	STORAGE
SD	STORM DRAIN, SOAP DISH
SCT	STRUCTURAL CLAY TILE
STR	STRUCTURE (AL)
SC-ACP	SUBCONTRACTOR - ACOUSTIC CEILINGS
SC-ELECT	SUBCONTRACTOR - ELECTRICAL
SC-ELEV	SUBCONTRACTOR - ELEVATORS
SC-FPROT	SUBCONTRACTOR - FIRE PROTECTION
SC-GLASS	SUBCONTRACTOR - GLASS AND GLAZING
SC-HVAC	SUBCONTRACTOR - HEATING, VENTILATING, AND AIR CONDITIONING
SC-PLAST	SUBCONTRACTOR - LATH AND PLASTER
SC-STONE	SUBCONTRACTOR - MARBLE AND STONE
SC-MASN	SUBCONTRACTOR - MASONRY
SC-WIND	SUBCONTRACTOR - METAL WINDOWS
SC-MTLS	SUBCONTRACTOR - MISCELLANEOUS METALS
SC-PAINT	SUBCONTRACTOR - PAINTING
SC-PLUMB	SUBCONTRACTOR - PLUMBING
SC-RESFL	SUBCONTRACTOR - RESILIENT FLOORING
SC-ROOF	SUBCONTRACTOR - ROOFING, FLASHING, AND SHEET-METAL
SC-TZZO	SUBCONTRACTOR - TERRAZZO
SC-TILE	SUBCONTRACTOR - TILE
SC-WD&C	SUBCONTRACTOR - WATERPROOFING, DAMP-PROOFING, AND CAULKING
SUSP	SUSPENDED
SYM	SYMMETRY (ICAL)
SYN	SYNTHETIC
SYS	SYSTEM

T

TB	TACKBOARD
TKS	TACKSTRIP
TEL	TELEPHONE
TV	TELEVISION
TEMP	TEMPERED
THBD	TEMPERED HARD BOARD
TERM	TERMINAL
TC	TERRA COTTA
TRZ	TERRAZZO
THK	THICKNESS
THR	THRESHOLD
TRS	TILE REDUCER STRIP
TPD	TOILET PAPER DISPENSER
TPTN	TOILET PARTITION
TOL	TOLERANCE
T&G	TONGUE AND GROOVE
TOB	TOP OF BRICK
TOBS	TOP OF BRICK SHELF
TOD	TOP OF DECK
TOS	TOP OF SLAB
TOW	TOP OF WALL
TL	TOWEL
TR	TRANSFORM
XFMR	TRANSFORMER
TGS	TRANSLUCENT GLAZING SYSTEM
TRNSP	TRANSPARENT
TRD	TREAD
TS	TUBE STEEL
TYP	TYPICAL

U

UC	UNDERCUT
UNDLMT	UNDERLAYMENT
UOD	UNDERSIDE OF DECK
UL	UNDERWRITERS LABORATORY
UNF	UNFINISHED
UV	UNIT VENTILATOR
UNO	UNLESS NOTED OTHERWISE
UR	URINAL

V

VR	VAPOR RETARDER
VR/AIB	VAPOR RETARDER/ AIR INFILTRATION BARRIER
VAR	VARNISH
VNR	VENEER
VIF	VERIFY IN FIELD
VRM	VERMICULITE
VRT	VERTICAL
VS	VERTICAL METAL SIDING
VEST	VESTIBULE
V	VINYL
VAT	VINYL ASBESTOS TILE
VB	VINYL BASE/ VAPOR BARRIER
VCT	VINYL COMPOSITION TILE
VF	VINYL FABRIC
VT	VINYL TILE
VWC	VINYL WALL COVERING
VP	VISION PANEL
VJ	V-JOINT

W

WSCT	WAINSCOT
WH	WALL HUNG
WHYD	WALL HYDRANT
WTW	WALL TO WALL
WR	WASTE RECEPTACLE, WATER REPELLENT
WC	WATER CLOSET
WP	WATER PROOFING, WORKING POINT
WR	WATER REPELLENT, WASTE RECEPTACLE
WRGWB	WATER RESISTANT GYPSUM WALL BOARD
WSCT	WATERSTOP
WHS	WEATHER STRIP, (ING)
WWF	WELDED WIRE FABRIC
W	WEST, WIDE, WIDTH
WHB	WHEEL BUMPER
W	WIDE, WIDTH, WEST
WND	WINDOW
WW	WINDOW WALL
WGL	WIRE GLASS
WM	WIRE MESH
W/	WITH
W/O	WITHOUT
WD	WOOD
WDB	WOODBASE
WP	WORKING POINT, WATER PROOFING
WI	WROUGHT IRON

X

XFMR	TRANSFORMER

SYMBOLS LEGEND

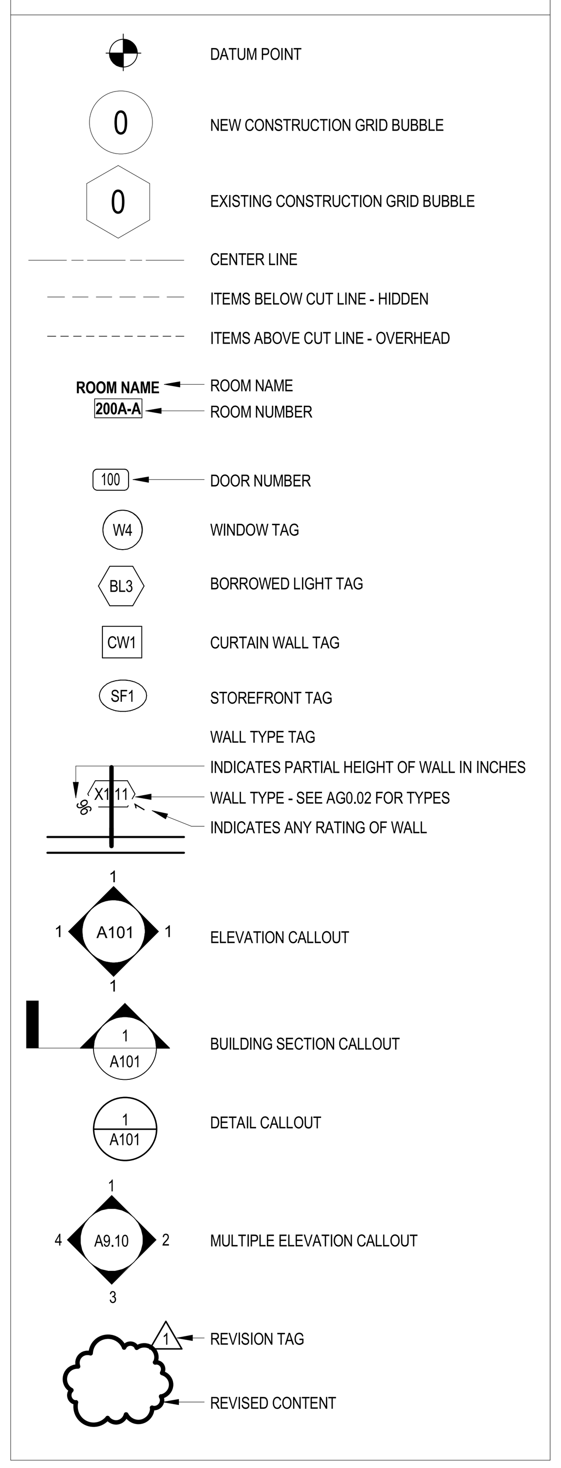

PROJECT SIGN

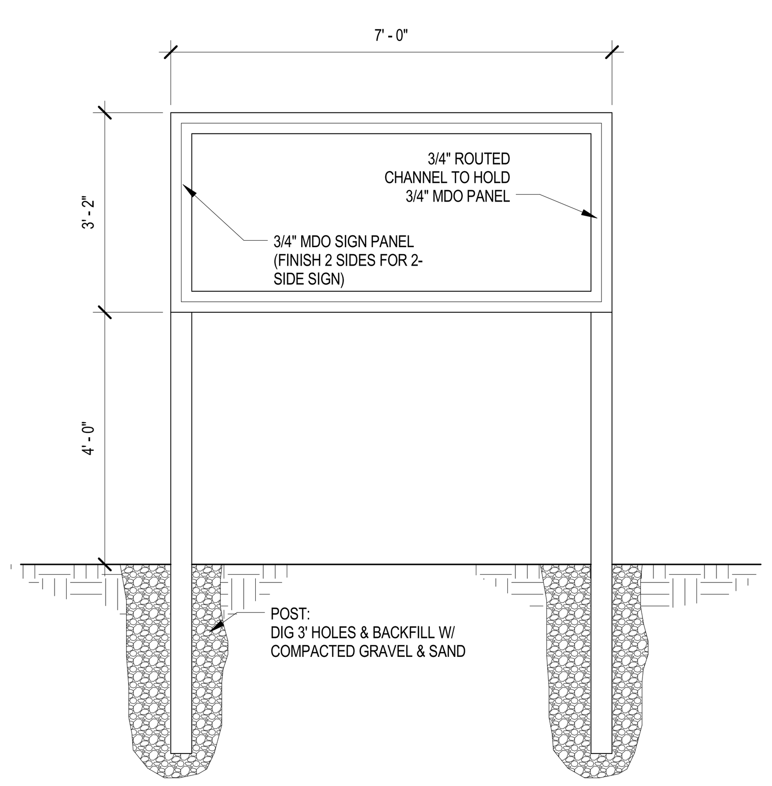

NOTES
1. ALL FRAME POSTS SHALL BE 4" x 4" PLANED CEDAR , PAINTED.
2. THE MDO PANEL SHALL BE PRIMED AND PAINTED, BOTH SIDES.
3. SIGN SHALL BE CONSTRUCTED SO THAT THE PANEL FITS INTO THE ROUTED CHANNEL AND ALL FASTENERS ARE NOT VISIBLE.
4. FASTENERS SHALL NOT PENETRATE MDO PANEL.

GENERAL NOTES

1. ALL CMU DIMENSIONS ARE TO THE FACE OF CMU. ALL METAL STUD PARTITIONS ARE TO THE FACE OF STUD UNLESS OTHERWISE NOTED
2. ABBREVIATIONS ON THIS SHEET APPLY TO ARCHITECTURAL DRAWINGS ONLY. THE LIST OF ABBREVIATIONS IS COMPREHENSIVE AND NOT RESTRICTED TO THOSE USED FOR THIS PROJECT – NOT ALL ABBREVIATIONS WILL BE FOUND WITHIN THE DRAWINGS.
3. LEGEND SYMBOLS ON THIS SHEET APPLY TO ARCHITECTURAL DRAWINGS ONLY. THE SYMBOLS LEGEND IS COMPREHENSIVE AND NOT RESTRICTED TO THOSE USED FOR THIS PROJECT – NOT ALL SYMBOLS WILL BE FOUND WITHIN THE DRAWINGS.
4. REPRESENTATION OF MATERIALS PATTERNS IN DRAWINGS AND DETAILS MAY BE AT A DIFFERENT APPARENT SCALE THAN THE THOSE SHOWN ON THE MATERIALS LEGEND ON THIS SHEET.
5. PROVIDE ALL CUT-OUTS, SLEEVES, BOX-OUTS, CHASES ETC. REQUIRED BY THE WORK. CONTRACTORS REQUIRING SLEEVES, BOX-OUTS, CORED HOLES, ETC. IN FLOORS AND WALLS TO FACILITATE THE INSTALLATION OF THEIR WORK SHALL FULLY COORDINATE THE LOCATION AND REQUIREMENTS WITH THE CM/GC AND ALL PERTINENT AND RELATED TRADES.
6. THE CONTRACTOR REQUIRING SLEEVES OR BOX-OUTS SHALL PROVIDE THOSE DEVICES TO THE APPROPRIATE TRADE FOR INSTALLATION.
7. THE CONTRACTORS FOR DIVISION 21, 22, 23, 26, 27. AND 28 WORK SHALL FULLY COORDINATE THE LOCATION AND INSTALLATION OF EQUIPMENT, PIPING, SUPPORTS, HOUSEKEEPING CURBS, DRAINS, DUCTWORK, ETC. TO PROVIDE A COMPLETE AND OPERATIONAL BUILDING. THE DRAWINGS DO NOT DEPICT THE INSTALLATION OF SUCH ITEMS WITH EXACT LOCATION; THEREFORE CONTRACTORS SHALL PERFORM THIS COORDINATION, AND THE OWNER WILL NOT CONSIDER ANY ADDITIONAL COSTS RELATED TO THE FIELD CONFLICTS RESULTING FROM FAILURE OF THE CONTRACTORS TO COORDINATE THEIR WORK.
8. CONTRACTORS REQUIRING ACCESS DOORS AND CLEANOUTS IN THE FINISHED SPACES SHALL PROVIDE DEVICES AND COORDINATE THE LOCATION WITH ALL AFFECTED TRADES. ACCESS DOORS IN FINISHED CEILINGS AND WALLS SHALL BE DOCUMENTED IN DETAIL ON COORDINATION DRAWINGS AND SUBMITTED TO THE ARCHITECT FOR REVIEW PRIOR TO PLACEMENT.
9. ALL CONTRACTORS PROVIDING "BUILT-IN" ITEMS,(INCLUDING BUT NOT LIMITED TO EQUIPMENT, CASEWORK, MILLWORK, WINDOWS, STOREFRONT AND CURTAIN WALL ASSEMBLIES, DOORS, FIELD INSTALLED GLAZING) SHALL FIELD VERIFY DIMENSIONS PRIOR TO FABRICATION.
10. THE CONTRACTOR SHALL BE RESPONSIBLE FOR MAINTAINING THE THERMAL AND ACOUSTICAL REQUIREMENTS OF THE FLOOR AND ROOF CONSTRUCTION, WALLS AND PARTITIONS BY INSTALLING PROPER SEALS AND CLOSURES AT THE PERIMETER OF ALL OPENINGS.
11. LOCATION OF ALL FLOOR DRAINS AND TRENCH DRAINS MUST BE COORDINATED WITH EQUIPMENT LAYOUTS AND RELATED TRADES.
12. AT ALL EXPOSED CONCRETE WALLS PROVIDE 3/4" x 3/4" CHAMFER AT OUTSIDE CORNERS (HORIZONTAL AND VERTICAL), UNLESS NOTED OTHERWISE.
13. WALL VR/AIB SHALL BE CONTINUOUS AND SHALL BE SEALED AT ALL EDGES OF WALL AND PENETRATIONS. REFER TO SPECIFIC DETAILS FOR TERMINATIONS AT WINDOWS, DOORS, CURTAIN WALL, TOP AND BOTTOM OF WALL, ETC. REFER TO SPECIFICATIONS AND MANUFACTURER RECOMMENDATIONS FOR ITEMS NOT SPECIFICALLY DETAILED.
14. ALL CMU DIMENSIONS ARE TO THE FACE OF CMU. ALL METAL STUD PARTITIONS ARE TO THE FACE OF STUD UNLESS OTHERWISE NOTED
15. ALL HANDRAILS SHALL BE DESIGNED AND CONSTRUCTED FOR A CONCENTRATED LOAD OF 200 POUNDS APPLIED AT ANY POINT IN ANY DIRECTION
16. ALL GUARDRAILS SHALL BE DESIGNED AND CONSTRUCTED FOR A CONCENTRATED LOAD OF 300 POUNDS APPLIED AT ANY POINT IN ANY DIRECTION ALONG THE TOP RAILING MEMBER. IT SHALL ALSO BE DESIGNED AND CONSTRUCTED FOR A UNIFORM LOAD OF 100 POUNDS PER FOOT APPLIED IN ANY DIRECTION AT THE REQUIRED GUARDRAIL HEIGHT
17. THE INFILL AREA OF A GUARDRAIL SYSTEM SHALL BE DESIGNED AND CONSTRUCTED FOR A HORIZONTAL CONCENTRATED LOAD OF 200 POUNDS APPLIED ON A (1) ONE SQUARE FOOT AREA, AT ANY POINT IN THE SYSTEM, INCLUDING INTERMEDIATE RAILS OR OTHER ELEMENTS SERVING THIS PURPOSE

MATERIALS LEGEND

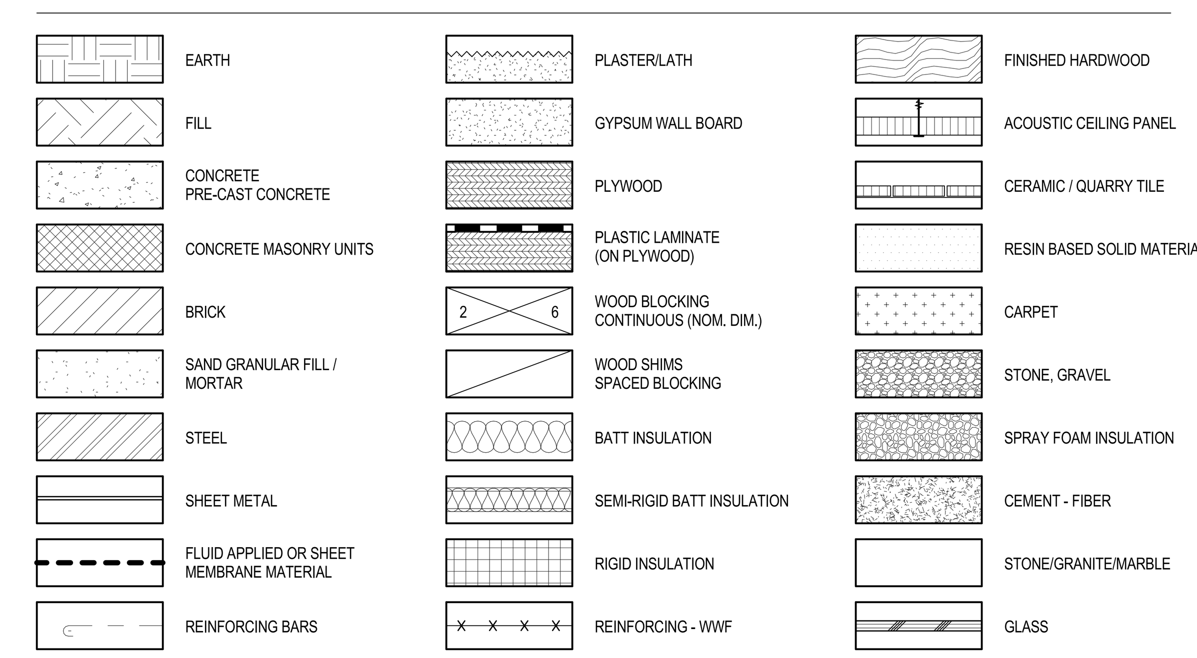

C:\Users\creardon\Documents\ARCH - 690 - WESTFORD FIRE STATION_creardon.rvt
11/20/2015 11:30:06 AM

ARCHITECTS • PROJECT MANAGERS
D&W DORE & WHITTIER ARCHITECTS, INC.
Burlington, VT 05401
212 Battery Street
P: 802.863.1428
F: 802.863.6955
Newburyport, MA 01950
260 Merrimac Street, Bldg 7
P: 978.499.2999
F: 978.499.2944
www.doreandwhittier.com

Project No. 14-0690

WESTFORD FIRE STATION
65 Boston Road
Westford, MA 01886

COPYRIGHT © 2014 by Dore & Whittier Architects Inc. (D&W) These documents are D&W's instruments of service and as such D&W retains all copyrights, common law and statutory rights. Use of these documents without D&W's express, written permission will result in copyright infringement.

SCHEMATIC DESIGN PRICING SET

REVISION:	Date:

DATE:	SCALE:
11/20/2015	As indicated
DRAWN BY:	CHK'D BY:
Author	Checker

SHEET TITLE:
ABBREVIATIONS SYMBOLS MATERIALS & LEGEND

SHEET #:
AG0.01

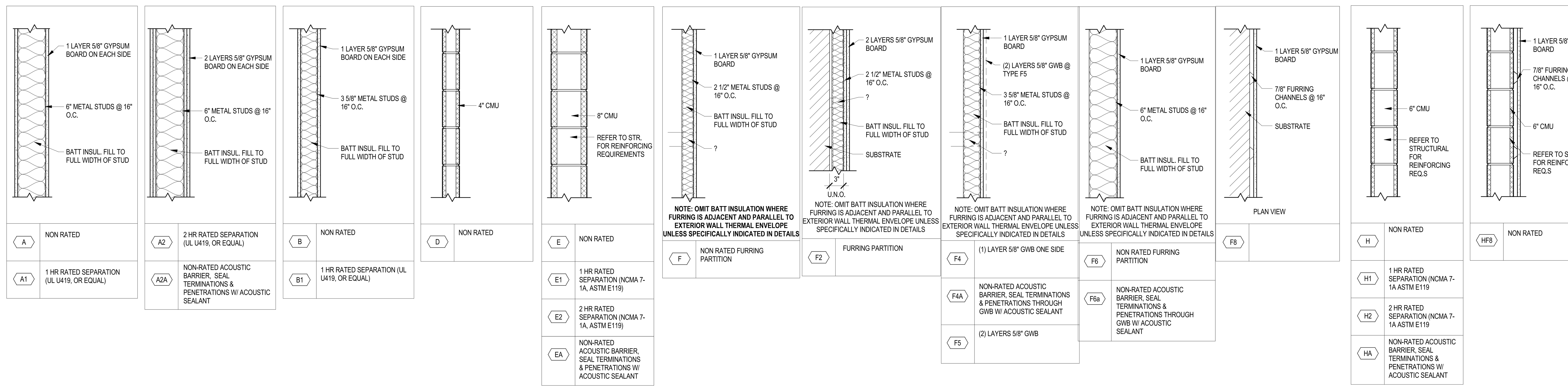

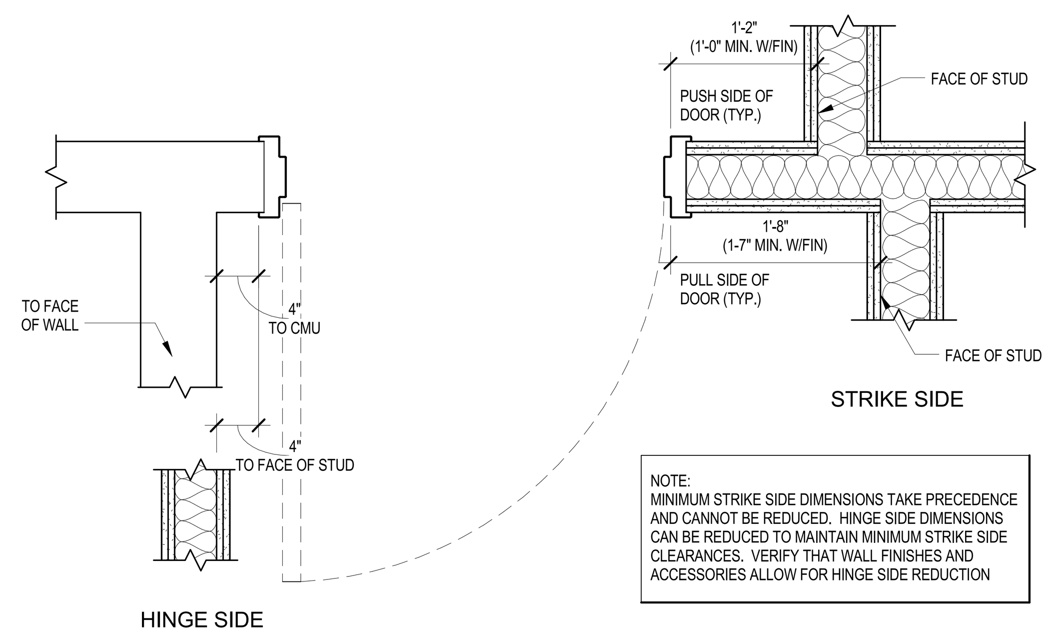

E12 TYPICAL DOOR OFFSETS (U.N.O)
1" = 1'-0"

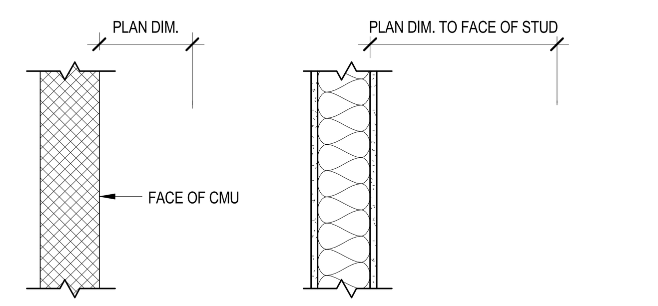

E9 TYPICAL DIMENSION DETAIL
1" = 1'-0"

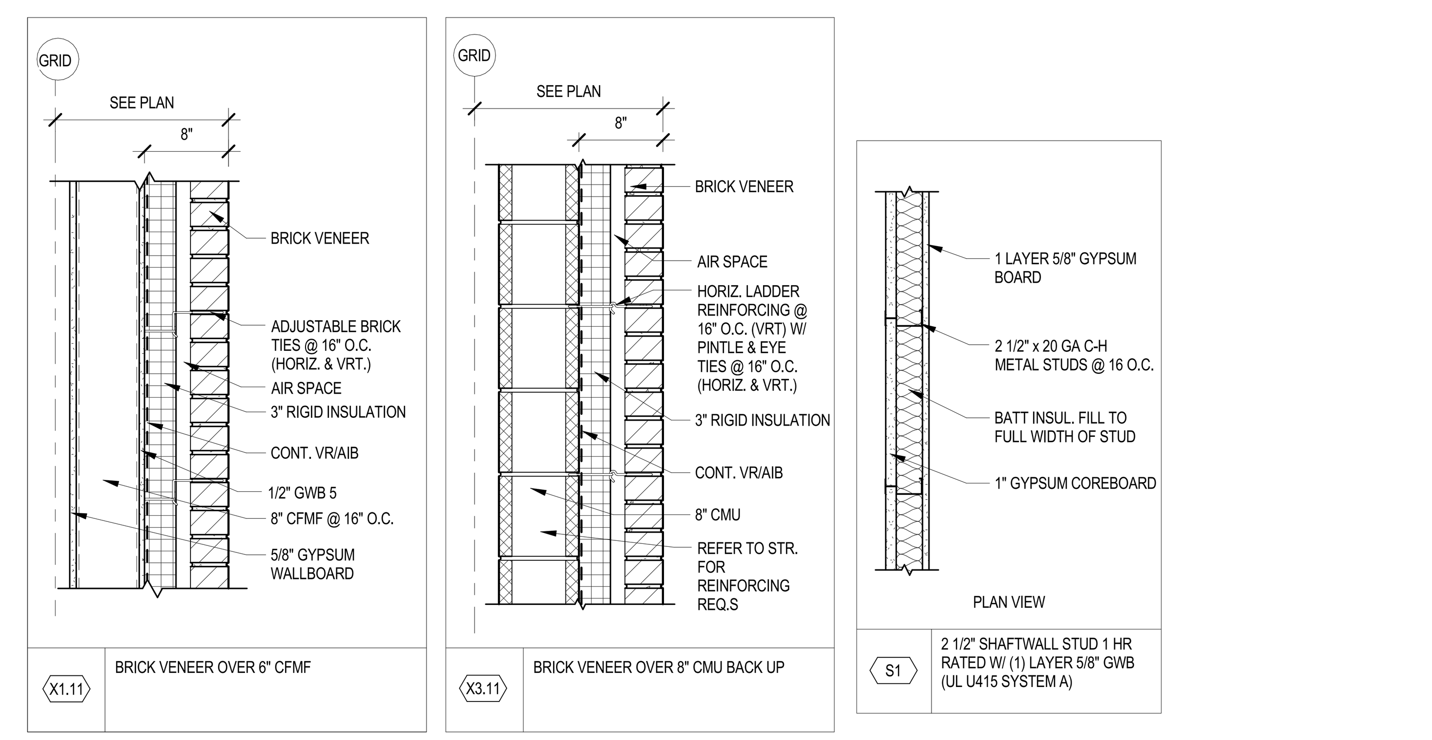

TYPICAL PARTITION NOTES

1. ALL PARTITIONS SHALL EXTEND TO THE UNDERSIDE OF THE METAL ROOF DECK OR FLOOR DECK ABOVE, UNLESS SPECIFICALLY INDICATED AS OTHERWISE ON DRAWINGS. REFER TO PARTITION TERMINATION DETAILS AT SHEET AG0.02.

2. ACOUSTIC INSULATION SHALL BE PROVIDED IN ALL NON-FIRE RATED PARTITIONS AS INDICATED BY PARTITION TYPES. INSULATION SHALL EXTEND MINIMUM 6 INCHES ABOVE THE HIGHEST ADJACENT CEILING. INSULATION IN FIRE RATED PARTITIONS SHALL BE PROVIDED PER THE U.L. ASSEMBLY DETAILS INDICATED.

3. PROVIDE CONTROL JOINTS IN GYPSUM WALL BOARD PARTITIONS AT 30 FEET MAXIMUM SPACING, WHETHER OR NOT THE DRAWINGS DEPICT CONTROL JOINTS. LOCATE JOINTS AT TOP CORNERS OF DOOR AND BORROWED LIGHT FRAMES TO THE GREATEST EXTENT POSSIBLE.

4. WHERE GWB CONTROL JOINTS OCCUR AWAY FROM DOOR OR BORROWED LIGHT FRAMES, JOINTS SHALL EXTEND THE FULL HEIGHT OF THE FRAMED WALL, WHETHER OR NOT CONCEALED BY SURFACE INSTALLED EQUIPMENT OR APPLIED TREATMENTS, OR CEILINGS.

5. PROVIDE FIRE RATED CONTROL JOINTS MATCHING THE REQUIRED RATING OF THE WALL ASSEMBLY AT FIRE RATED WALLS. REFER TO CONTROL JOINT DETAILS AT SHEET AG0.02.

6. PROVIDE MASONRY CONTROL JOINTS AT MAXIMUM 24 FOOT SPACING, AND WHERE INDICATED ON DRAWINGS. PROVIDE BRICK CONTROL JOINTS WITHIN 24 INCHES OF EACH OUTWARD CORNER OF EXTERIOR WALLS. AT INWARD CORNERS, PROVIDE CONTROL JOINTS AT THE CHANGE IN SURFACE PLANE ON THE "LEAST VISIBLE" SIDE OF THE CORNER.

7. THE INTEGRITY OF GWB FIRE RATED PARTITIONS SHALL BE MAINTAINED WHEREVER RECESSED EQUIPMENT, DEVICES, SPECIALTIES, OR OTHER COMPONENTS OF MORE THAN 20 SQUARE INCHES IN FACE AREA OF RECESS OR PENETRATION OCCURS. WHERE SUCH RECESSED EQUIPMENT DOES NOT FEATURE A FIRE RATED CABINET OR ENCLOSURE MATCHING THE FIRE RATING OF THE WALL BEING PENETRATED, THE RECESS SHALL BE LINED WITH LAYER(S) OF GYPSUM WALL BOARD TO PROVIDE AN EQUIVALENT FIRE RATING, THROUGHOUT THE RECESS, OR FIRESTOPPED WITH AN APPROVED ASSEMBLY SUITABLE TO THE PENETRATION SIZE, PENETRATING ITEM, AND REQUIRED RATING. THE CONTRACTOR RESPONSIBLE FOR THE RECESSED EQUIPMENT SHALL COORDINATE THE RECESS REQUIREMENTS, DEPTH, AND DETAILING OF THE OPENING WITH THE CM/GC TO CONFIRM THAT ADEQUATE WALL DEPTH EXISTS. FIRESTOPPING MATERIALS SHALL BE PROVIDED BY THE CONTRACTOR REQUIRING THE PENETRATION PER THE REQUIREMENTS OF SECTION 07 84 00. IF A RATED CABINET IS NOT PROVIDED THE COST OF LINING THE RECESS WITH GYPSUM WALL BOARD OR PROVISION OF FIRESTOPPING SHALL BE PAID BY THE CONTRACTOR RESPONSIBLE FOR THE RECESSED EQUIPMENT.

8. LINTELS SHALL BE PROVIDED AT OPENINGS IN MASONRY PARTITIONS FOR DOORS, WINDOWS, LOUVERS, RECESSED EQUIPMENT INCLUDING, BUT NOT LIMITED TO UNIT HEATERS, CONVECTORS, FIRE HOSE CABINETS, TOILET ACCESSORIES, AND DUCTWORK PENETRATIONS THAT ARE OVER 16 INCHES WIDE. PROVIDE LOOSE STEEL LINTELS (FURNISHED BY SECTION 05 00 01 TO SECTION 04 00 01 FOR INSTALLATION) AT PENETRATIONS NOT EXPOSED TO VIEW OR IN CONCEALED SPACES. AT LOCATIONS WHERE MASONRY IS EXPOSED TO VIEW, PROVIDE UNIT MASONRY LINTELS UNLESS SPANS REQUIRE OTHERWISE. REFER TO STRUCTURAL DRAWINGS FOR MASONRY LINTEL AND LOOSE STEEL LINTEL SCHEDULES AND TYPICAL DETAIL REQUIREMENTS.

9. ALL EXPOSED VERTICAL CORNERS OF CONCRETE MASONRY UNITS SHALL FEATURE RADIUS CORNER BLOCK, UNLESS SPECIFICALLY INDICATED AS SQUARE OR OTHERWISE IN DETAILS.

10. FIRE RESISTANCE RATING FOR MASONRY WALLS SHALL BE ACHIEVED BY ONE OF THE FOLLOWING METHODS, WHICH SHALL BE AT THE CONTRACTOR'S OPTION. THE CONTRACTOR SHALL DOCUMENT WHICH COMPLIANCE METHOD IS PROPOSED AS PART OF THE PRODUCT SUBMITTALS:
   a. USE OF MASONRY UNITS IN THICKNESS INDICATED, BEARING U.L. TESTING APPROVAL (AS A STAND-ALONE SYSTEM WITHOUT APPLIED FINISHES) FOR THE RATINGS INDICATED.
   b. USE OF MASONRY UNITS IN THICKNESS INDICATED, OF COMPOSITION, DENSITY, AND FACE THICKNESS TO MEET THE REQUIREMENTS OF TABLE 721.3.2 "MINIMUM EQUIVALENT THICKNESS OF BEARING OR NONBEARING CONCRETE MASONRY WALLS" OF THE MA STATE BUILDING CODE (IBC), BASED ON THE EQUIVALENT THICKNESS OF THE HOLLOW, NON-GROUT FILLED UNITS DETERMINED IN ACCORDANCE WITH ASTM C140.
   c. USE OF MASONRY UNITS IN SIZES INDICATED, WITH AIR SPACES AND CELLS WITHIN BLOCK FILLED SOLID WITH SAND, PEA-STONE, CRUSHED STONE, SLAG, OR OTHER MATERIALS AS DESCRIBED IN SECTION 721.3.1.4, MEETING THE ASTM TESTS DESCRIBED THEREIN, SUCH THAT THE TOTAL THICKNESS OF THE MASONRY UNITS MEETS THE EQUIVALENT THICKNESS REQUIREMENTS LISTED IN TABLE 721.3.2 OF THE MA STATE BUILDING CODE (IBC) FOR THE BLOCK COMPOSITION AND AGGREGATES PROPOSED FOR USE BY THE CONTRACTOR.
   d. USE OF MASONRY UNITS IN THICKNESS INDICATED, WITH ALL AIR SPACES AND CORES GROUTED SOLID, SUCH THAT THE TOTAL THICKNESS OF THE MASONRY UNITS MEETS THE EQUIVALENT THICKNESS REQUIREMENTS LISTED IN TABLE 721.3.2 OF THE MA STATE BUILDING CODE (IBC) FOR THE BLOCK COMPOSITION AND AGGREGATES PROPOSED FOR USE BY THE CONTRACTOR.

11. ALL FIRE RATED PARTITIONS SHALL EXTEND TO UNDERSIDE OF DECK ABOVE, WITH ALL GAPS AND DECK FLUTES AT TOPS OF WALLS FILLED WITH FIRE RESISTANT JOINT SEALANTS (FRJS).
   a. FRJS1 – PACKING MATERIAL: MINIMUM 4.0 PCF MINERAL WOOL INSULATION, IN THICKNESS 1" LESS THAN OVERALL WALL THICKNESS OR AS REQUIRED BY THE SELECTED U.L. ASSEMBLY SUITABLE TO THE WALL TYPE AND REQUIRED RATING (WHICHEVER IS GREATER). TIGHTLY PACK MINERAL WOOL INTO FLUTES OF STEEL DECKING AND GAP AT TOP OF WALL TO FILL GAPS COMPLETELY AND FORM A PERMANENT FORM TO SERVE AS BACKING FOR FRJS2.
   b. FRJS2: FIRESTOPPING SEALANT: MINIMUM 1/2" THICK MATERIAL INSTALLED ON EACH SIDE OF JOINT TO COVER FRJS1 COMPLETELY AND SPAN BUILDING JOINT, WITH SURFACE OF SEALANT FLUSH WITH SURFACE OF WALL. WHERE EXPOSED TO VIEW FIRESTOPPING SEALANT SHALL BE PAINTABLE AND INSTALLATION SHALL BE SUITABLE FOR EXPOSURE TO VIEW IN FINISHED SPACES.
   c. SELECTION OF PROPRIETARY MATERIALS AND U.L. APPROVED ASSEMBLIES APPROPRIATE TO REQUIRED RATINGS AND CONSTRUCTION IS AT THE CONTRACTOR'S OPTION, HOWEVER **ALL FIRESTOPPING MATERIALS FOR THE PROJECT SHALL BE PROVIDED FROM THE SAME MANUFACTURER REGARDLESS OF WHICH TRADE OWNS THE FIRESTOPPING WORK.** THE CM / GC SHALL BE RESPONSIBLE FOR COORDINATING THIS REQUIREMENT WITH ALL TRADES.

12. ALL GAPS AT BUILDING JOINTS AND THROUGH PENETRATIONS AT WALLS THAT ARE INDICATED AS "SMOKE RATED" SHALL BE FILLED WITH FRJS #1 AND SEALED ON ONE SIDE WITH FRJS #2 AS DEFINED ABOVE, SUCH THAT GAPS ARE SEALED TO PREVENT THE PASSAGE OF SMOKE.

13. ALL GAPS AT BUILDING JOINTS AND THROUGH-PENETRATIONS OF NON-FIRE RATED WALLS SHALL BE SEALED TO REDUCE NOISE TRANSFER. AT CONTRACTOR'S OPTION, PROVIDE ACOUSTIC FOAM INSULATION PER SECTION 07 21 19, OR PACK CONTINUOUS MINERAL WOOL INSULATION TO FILL GAPS TO FULL THICKNESS OF WALL.

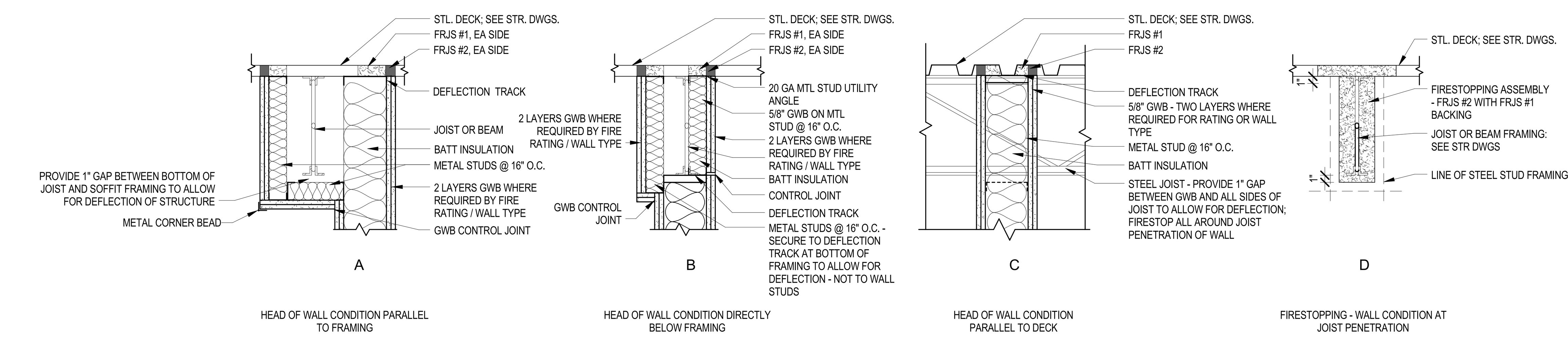

C12 TYPICAL TOP OF STUD PARTITION DETAILS @ STRUCTURE
1" = 1'-0"

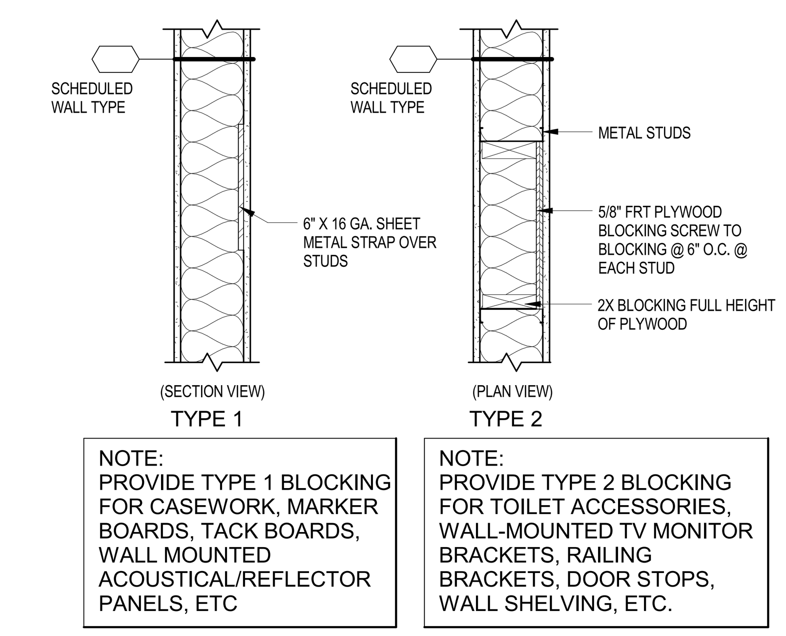

C6 TYPICAL BLOCKING DETAIL
1" = 1'-0"

PARTITION KEY NOTES

NOTE: FIRE RATED CMU PARTITIONS & WALLS SHALL COMPLY WITH NCMA TEK 7-1 (1995) EQUIVALENT THICKNESS AND TABLE 6.0. GROUT CELLS AS REQUIRED TO ACHIEVE EQUIVALENT THICKNESS FOR FIRE RATING

P1 A. **AT FIRE RATED PARTITIONS**

FILL ALL GAPS AND DECK FLUTES WITH FIRE RESISTIVE JOINT SEALANTS (FRJS) AT TOP OF FIRE RATED PARTITIONS (BY 07 84 00) AS DESCRIBED BELOW

1. FRJS #1: PACKING MATERIAL:
MIN. 4 1/2" THICKNESS OF MIN. 4.0 PCF MINERAL WOOL BATT INSULATION FIRMLY PACKED INTO FLUTES OF THE STEEL FLOOR UNITS AND BETWEEN THE TOP OF THE MASONRY WALL OR WALL BOARD AND BOTTOM OF THE STEEL FLOOR UNITS AS A PERMANENT FORM. PACKING MATERIAL TO BE RECESSED FROM EACH SURFACE OR WALL TO ACCOMMODATE THE REQUIRED THICKNESS OF FILL MATERIAL
NOTE: USE 3 1/2" THICKNESS AT 1 HR FIRE RATED STUD WALLS

2. FRJS #2: FILL, VOID OR CAVITY MATERIAL:
MIN. 1/2" THICKNESS OF FILL MATERIAL INSTALLED ON EACH SIDE OF THE WALL IN THE FLUTES OF THE STEEL FLOOR UNITS AND BETWEEN THE TOP OF THE WALL AND THE BOTTOM OF THE STEEL FLOOR UNITS, FLUSH WITH EACH SURFACE OF WALL

P1 B. **AT NON-RATED PARTITIONS**

WHERE INDICATED ON THE PARTITION DETAILS AS FRJS #1 AND FRJS #2, SUBSTITUTE "SPRAY APPLIED ACOUSTIC INSULATION" (BY 07 21 19)

P2 **CMU PARTITION BRACING BY MISCELLANEOUS METAL SUBCONTRACTOR**. SEE STRUCTURAL DRAWINGS FOR DETAILED REQUIREMENTS

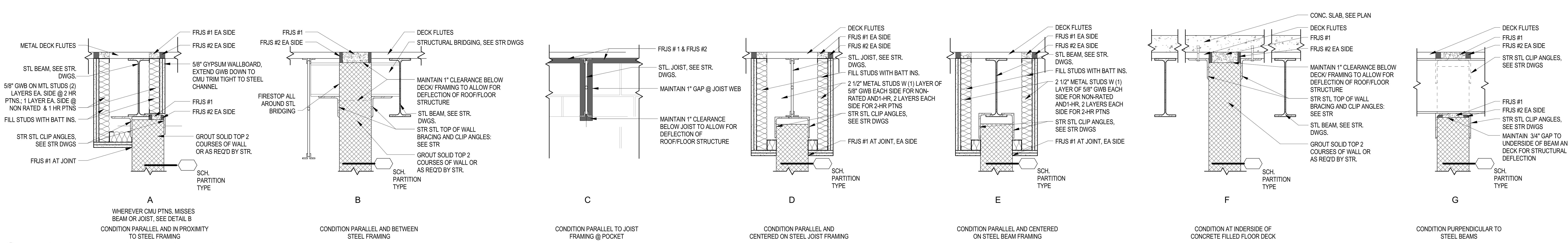

A12 TYPICAL CMU PARTITION BRACING DETAILS
1" = 1'-0"

GYPSUM WALL BOARD SCHEDULE

1. WHERE METAL STUD AND GYPSUM WALL BOARD PARTITIONS ARE INDICATED ON THE DRAWINGS USE THE FOLLOWING TABLE IN CONJUNCTION WITH THE ROOM FINISH SCHEDULE TO DETERMINE THE TYPE OF GYPSUM WALL BOARD REQUIRED

GWB1	ABUSE RESISTANCE/ ENHANCED CORE	USE ON ALL INTERIOR WALLS OR WHERE NOTED (TO 10'-0" A.F.F.)
GWB2	NON REINFORCED	USE ON ALL INTERIOR WALLS FROM 10'-0" A.F.F. TO BOTTOM OF DECK UNLESS NOTED OTHERWISE, AND AT SOFFITS
GWB3	WATER-RESISTANT	USE IN ALL TOILET ROOMS, LOCKER ROOMS, KITCHENS AND OTHER AREAS WHICH ARE SUBJECT TO MODERATE AMOUNTS OF MOISTURE*
GWB4	FLEXIBLE	USE IN AREAS THAT REQUIRE CURVED WALLS OR SOFFITS, ETC.
GWB5	EXTERIOR GYPSUM SHEATHING	USE ON ALL EXTERIOR WALLS WITH METAL STUD BACK-UP
GWB6	CEILING BOARD	HARD CEILINGS (EXCEPT IN AREAS THAT WOULD OTHERWISE REQUIRE GWB3 OR GWB8 DUE TO MOISTURE*)
GWB7	EXTERIOR CEILING BOARD	EXTERIOR GYPSUM BOARD SOFFITS
GWB8	CEMENTITIOUS BOARD	SHOWER AREAS AND OTHER HIGH MOISTURE AREAS*
GWB9	CEMENTITIOUS TILE BACKER BOARD	ALL LOCATIONS BEHIND WALL TILE (WET OR DRY)

*MODERATE AND HIGH MOISTURE AREAS SHALL BE AS DEFINED BY THE GWB MANUFACTURER FOR EACH TYPE OF BOARD. COORDINATE WITH MANUFACTURERS RECOMMENDED USES AND/OR MOISTURE LIMITATIONS.

ARCHITECTS • PROJECT MANAGERS
DORE & WHITTIER ARCHITECTS, INC.
Burlington, VT 05401
212 Battery Street
P: 802.863.1428
F: 802.863.6955
Newburyport, MA 01950
260 Merrimac Street, Bldg 7
P: 978.499.2999
F: 978.499.2944
www.doreandwhittier.com

Project No.
14-0690

WESTFORD FIRE STATION
65 Boston Road
Westford, MA 01886

COPYRIGHT © 2014 by Dore & Whittier Architects Inc. (D&W) These documents are D&W's instruments of service and as such D&W retains all copyrights, common law and statutory rights. Use of these documents without D&W's express, written permission will result in copyright infringement.

SCHEMATIC DESIGN PRICING SET

REVISION:	Date:

DATE:	SCALE:
11/20/2015	As indicated
DRAWN BY:	CHK'D BY:
Author	Checker

SHEET TITLE:
WALL TYPES, NOTES & DETAILS

SHEET #:
AG0.02

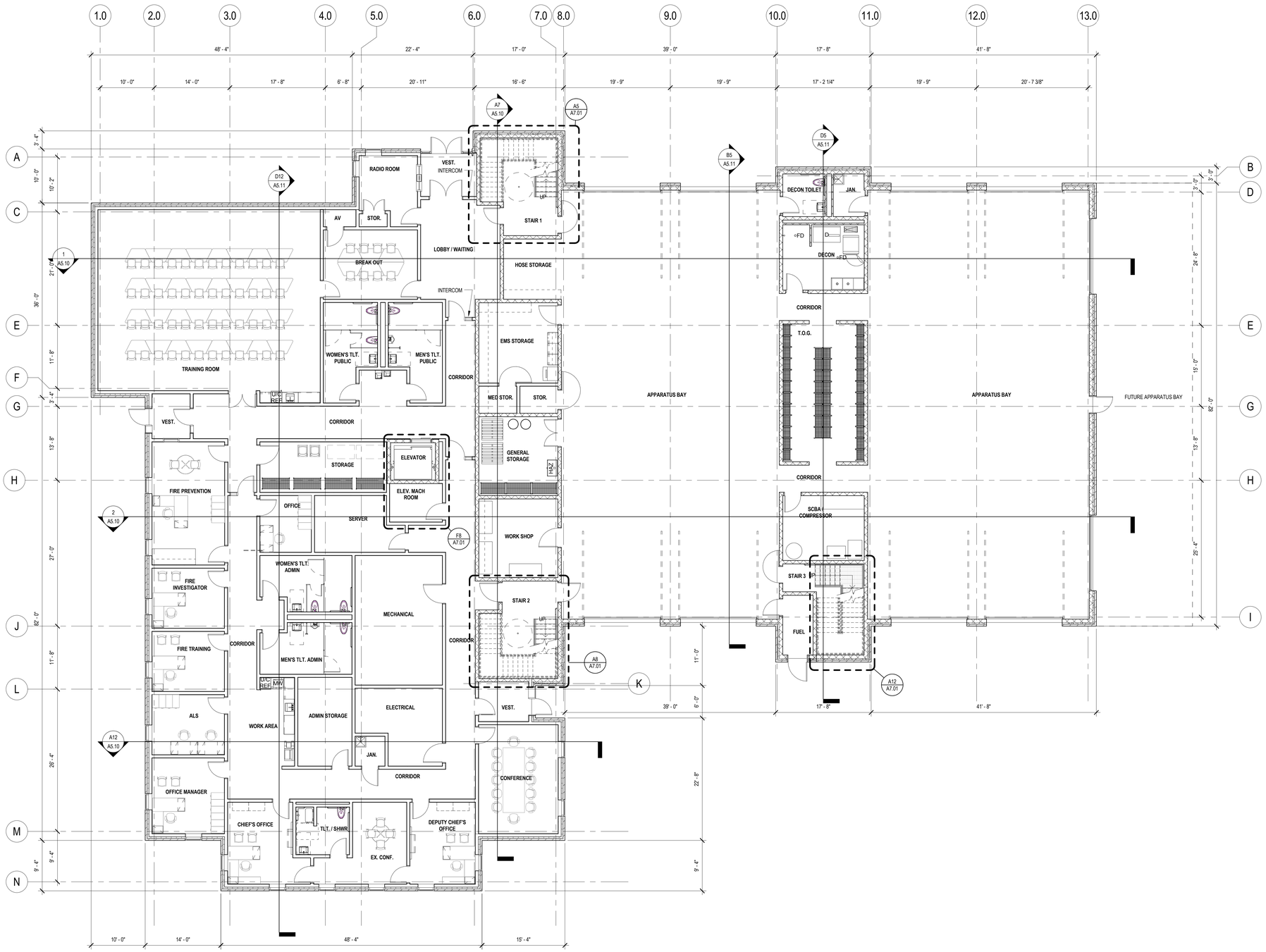

N

PROJECT NORTH

0 4' 8' 16'

SCALE: 1/8"=1'-0" GRAPHIC SCALE

KEY PLAN

ARCHITECTS • PROJECT MANAGERS

Brattleboro, VT 05301
T : 802.257.5124
F : 802.863.1455

Northampton, MA 01060
260 Merrimac Street, Bldg 7
Northampton, MA 01060
T : 978.499.3944
F : 978.499.3944

www.doreandwhitter.com

DORE & WHITTER ARCHITECTS, INC.

Project No.
14-0690

WESTFORD FIRE STATION

65 Boston Road
Westford, MA 01886

COPYRIGHT © 2014 by Dore & Whitter Architects Inc. (D&W)
These documents are D&W's instruments of service and as such D&W retains all copyrights, common law and statutory rights. Use of these documents without D&W's express, written permission will result in copyright infringement.

SCHEMATIC DESIGN PRICING SET

REVISION:	Date:

DATE:	SCALE:
11/20/2015	1/8" = 1'-0"
DRAWN BY: CR	CHK'D BY: Checker

SHEET TITLE:
LEVEL 1 OVERALL PLAN

SHEET #:
A1.10

11/20/2015 11:29:32 AM C:\Users\creardon\Documents\ARCH - 690 - WESTFORD FIRE STATION_creardon.rvt

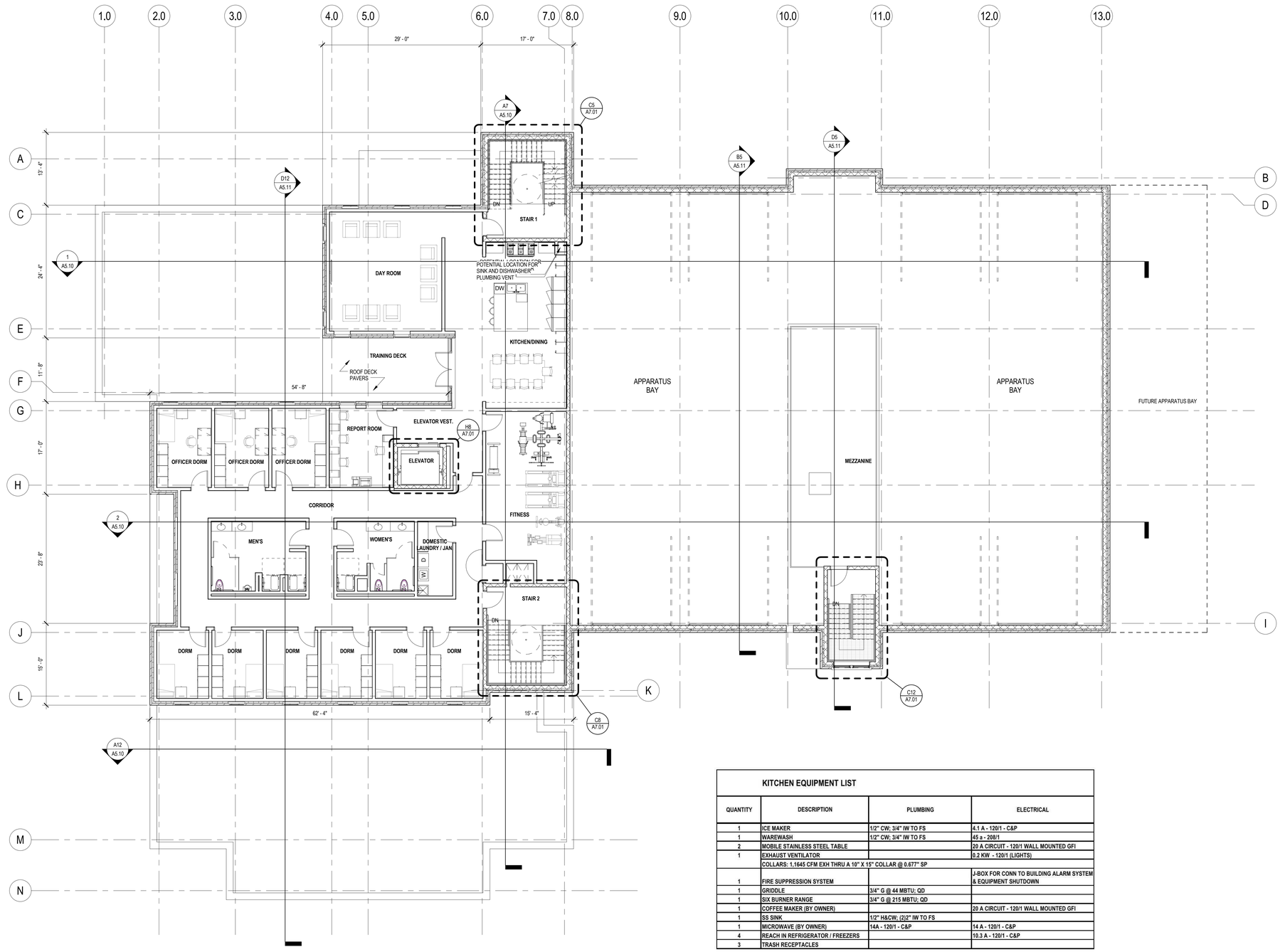

KITCHEN EQUIPMENT LIST

QUANTITY	DESCRIPTION	PLUMBING	ELECTRICAL
1	ICE MAKER	1/2" CW; 3/4" IW TO FS	4.1 A - 120/1 - C&P
1	WAREWASH	1/2" CW; 3/4" IW TO FS	45 a - 208/1
2	MOBILE STAINLESS STEEL TABLE		20 A CIRCUIT - 120/1 WALL MOUNTED GFI
1	EXHAUST VENTILATOR		0.2 KW - 120/1 (LIGHTS)
	COLLARS: 1,1645 CFM EXH THRU A 10" X 15" COLLAR @ 0.677" SP		
1	FIRE SUPPRESSION SYSTEM		J-BOX FOR CONN TO BUILDING ALARM SYSTEM & EQUIPMENT SHUTDOWN
1	GRIDDLE	3/4" G @ 44 MBTU; QD	
1	SIX BURNER RANGE	3/4" G @ 215 MBTU; QD	
1	COFFEE MAKER (BY OWNER)		20 A CIRCUIT - 120/1 WALL MOUNTED GFI
1	SS SINK	1/2" H&CW; (2)2" IW TO FS	
1	MICROWAVE (BY OWNER)	14A - 120/1 - C&P	14 A - 120/1 - C&P
4	REACH IN REFRIGERATOR / FREEZERS		10.3 A - 120/1 - C&P
3	TRASH RECEPTACLES		

N
TRUE NORTH
PROJECT NORTH

0 4' 8' 16'
SCALE: 1/8"=1'-0" GRAPHIC SCALE

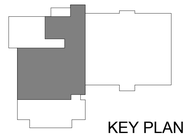

KEY PLAN

ARCHITECTS • PROJECT MANAGERS
Brattleboro, VT 05401
T : 802.257.5244
F : 802.257.1455
Newburyport, MA 01950
260 Merrimac Street, Bldg 7
T : 978.499.3940
F : 978.499.3944
www.doreandwhitter.com
DORE & WHITTER ARCHITECTS, INC.

Project No.
14-0690

WESTFORD FIRE STATION

65 Boston Road
Westford, MA 01886

COPYRIGHT © 2014 by Dore & Whitter Architects Inc. (D&W)
These documents are D&W's instruments of service and as such D&W retains all copyrights, common law and statutory rights. Use of these documents without D&W's express, written permission will result in copyright infringement.

SCHEMATIC DESIGN PRICING SET

REVISION:	Date:

DATE: 11/20/2015
SCALE: 1/8" = 1'-0"
DRAWN BY: CR
CHKD BY: Checker

SHEET TITLE:
LEVEL 2 OVERALL PLAN

SHEET #:
A1.20

11/20/2015 11:29:36 AM C:\Users\creardon\Documents\ARCH - 690 - WESTFORD FIRE STATION_creardon.rvt

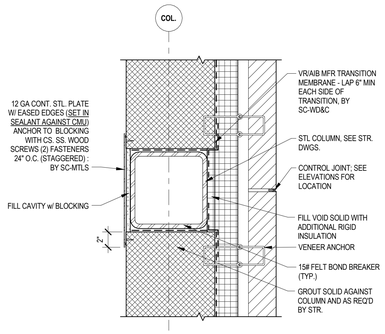

H9 TYPICAL COLUMN DETAIL @ X3 WALL
1 1/2" = 1'-0"

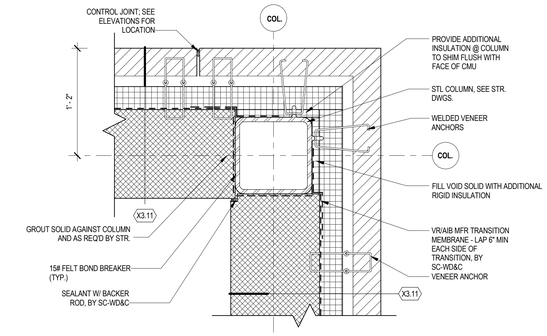

H7 TYPICAL COLUMN DETAIL @ X3 CORNER
1 1/2" = 1'-0"

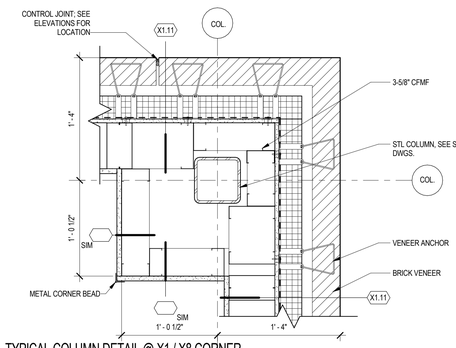

H4 TYPICAL COLUMN DETAIL @ X1 / X8 CORNER
1 1/2" = 1'-0"

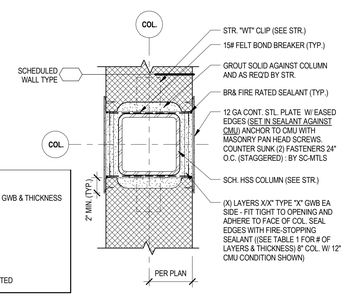

TABLE 1: NUMBER OF LAYERS OF GWB

COLUMN SIZE	CMU PARTITION TYPE	# LAYERS GWB & THICKNESS
4"	8"	2 (5/8") & 1 (1/2")
8"	12"	2 (5/8") & 1 (1/2")
4"	6"	1 (5/8")
6"	8"	1 (5/8")
10"	12"	1 (5/8")

NOTES:
1. PAINT COVER PLATES (TYPICAL)
2. ASSEMBLY SIMILAR TO U.L. #X-526 1-HOUR RATED

F10 TYPICAL COLUMN COVER PLATE DETAIL-TYPE D
1 1/2" = 1'-0"

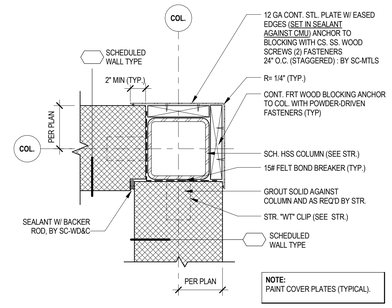

NOTE:
PAINT COVER PLATES (TYPICAL).

F7 TYPICAL COLUMN COVER PLATE DETAIL-TYPE C
1 1/2" = 1'-0"

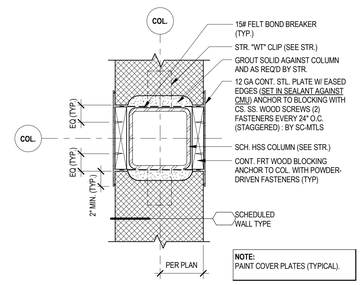

NOTE:
PAINT COVER PLATES (TYPICAL).

F5 TYPICAL COLUMN COVER PLATE DETAIL-TYPE B
1 1/2" = 1'-0"

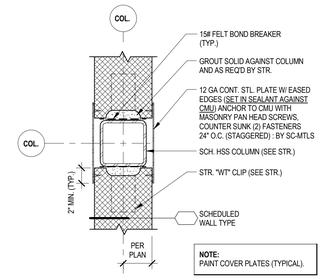

NOTE:
PAINT COVER PLATES (TYPICAL).

F2 TYPICAL COLUMN COVER PLATE DETAIL-TYPE A
1 1/2" = 1'-0"

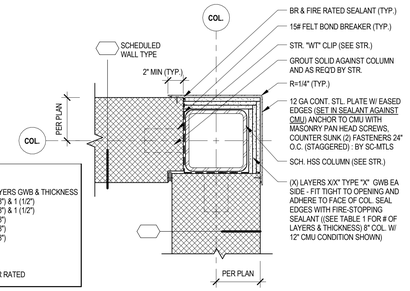

TABLE 1: NUMBER OF LAYERS OF GWB

COLUMN SIZE	CMU PARTITION TYPE	# LAYERS GWB & THICKNESS
4"	8"	2 (5/8") & 1 (1/2")
8"	12"	2 (5/8") & 1 (1/2")
4"	6"	1 (5/8")
6"	8"	1 (5/8")
10"	12"	1 (5/8")

NOTES:
1. PAINT COVER PLATES (TYPICAL)
2. ASSEMBLY SIMILAR TO U.L. #X-526 1-HOUR RATED

D8 TYPICAL COLUMN COVER PLATE DETAIL-TYPE E
1 1/2" = 1'-0"

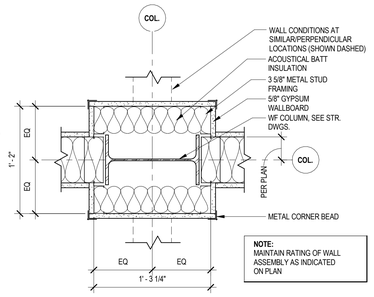

NOTE:
MAINTAIN RATING OF WALL ASSEMBLY AS INDICATED ON PLAN.

D5 GWB COLUMN ENCLOSURE- TYPE B
1 1/2" = 1'-0"

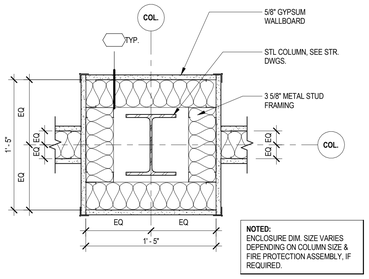

NOTED:
ENCLOSURE DIM. SIZE VARIES DEPENDING ON COLUMN SIZE & FIRE PROTECTION ASSEMBLY, IF REQUIRED.

D2 GWB COLUMN ENCLOSURE- TYPE A
1 1/2" = 1'-0"

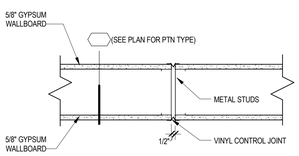

NON-RATED GWB PARTITION

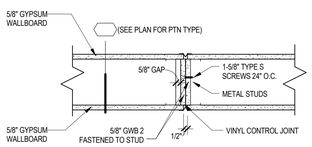

1-HOUR RATED GWB PARTITION

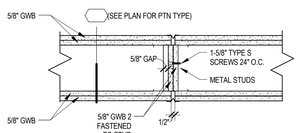

2-HOUR RATED GWB PARTITION

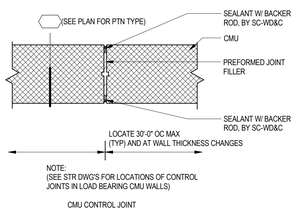

NOTE:
(SEE STR DWG'S FOR LOCATIONS OF CONTROL JOINTS IN LOAD BEARING CMU WALLS)

CMU CONTROL JOINT

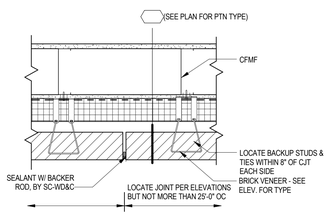

EXT. CONTROL JOINT @ STUD BACK-UP WALL

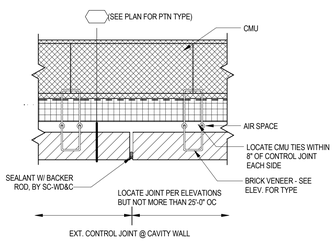

EXT. CONTROL JOINT @ CAVITY WALL

A12 TYPICAL CONTROL JOINTS
1 1/2" = 1'-0"

ARCHITECTS • PROJECT MANAGERS
Brattleboro, VT 05301
T : 802.257.5161
F : 802.863.1455
Northampton, MA 01060
260 Meadow Street, Bldg 7
T : 413.586.2350
F : 978.499.3944
www.doreandwhitter.com
DORE & WHITTER ARCHITECTS, INC.

Project No.
14-0690

WESTFORD FIRE STATION

65 Boston Road
Westford, MA 01886

COPYRIGHT © 2014 by Dore & Whitter Architects Inc. (D&W)
These documents are D&W's instruments of service and as such D&W retains all copyrights, under law and statutory rights. Use of these documents without D&W's express, written permission will result in copyright infringement.

SCHEMATIC DESIGN PRICING SET

REVISION:	Date:

DATE:	SCALE:
11/20/2015	1 1/2" = 1'-0"
DRAWN BY: CR	CHK'D BY: Checker

SHEET TITLE:
PLAN DETAILS

SHEET #:
A1.50

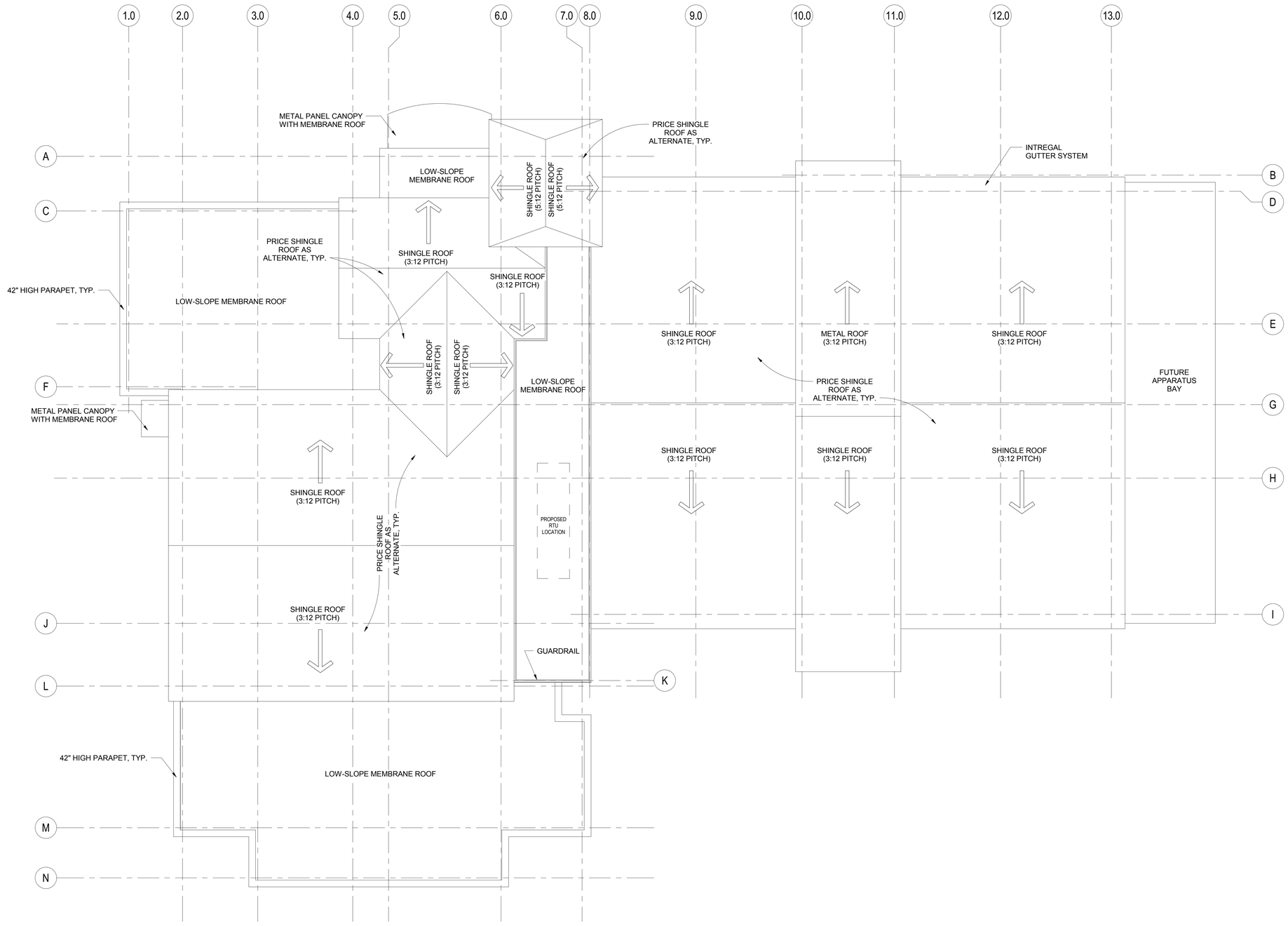

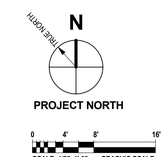

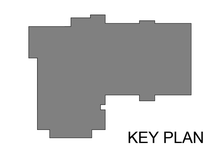

KEY PLAN

ARCHITECTS • PROJECT MANAGERS
Brattleboro, VT 05401
T : 802.257.5244
F : 802.863.1455
Newburyport, MA 01950
200 Merrimac Street, Bldg 7
T : 978.499.3900
F : 978.499.3944
www.doreandwhitter.com
DORE & WHITTER ARCHITECTS, INC.

Project No. 14-0690

WESTFORD FIRE STATION

65 Boston Road
Westford, MA 01886

COPYRIGHT © 2014 by Dore & Whitter Architects Inc. (D&W). These documents are D&W's instruments of service and as such D&W retains all copyrights, common law and statutory rights. Use of these documents without D&W's express, written permission will result in copyright infringement.

SCHEMATIC DESIGN PRICING SET

REVISION:	Date:

DATE: 11/20/2015	SCALE: 1/8" = 1'-0"
DRAWN BY: cr	CHKD BY: Checker

SHEET TITLE: ROOF PLAN

SHEET #: A3.10

11/20/2015 11:29:42 AM C:\Users\creardon\Documents\ARCH - 690 - WESTFORD FIRE STATION_creardon.rvt

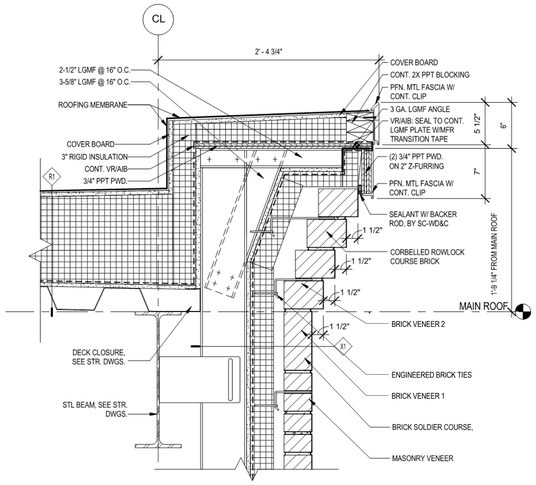

F12 ROOF EDGE DETAIL SIM.
1 1/2" = 1'-0"

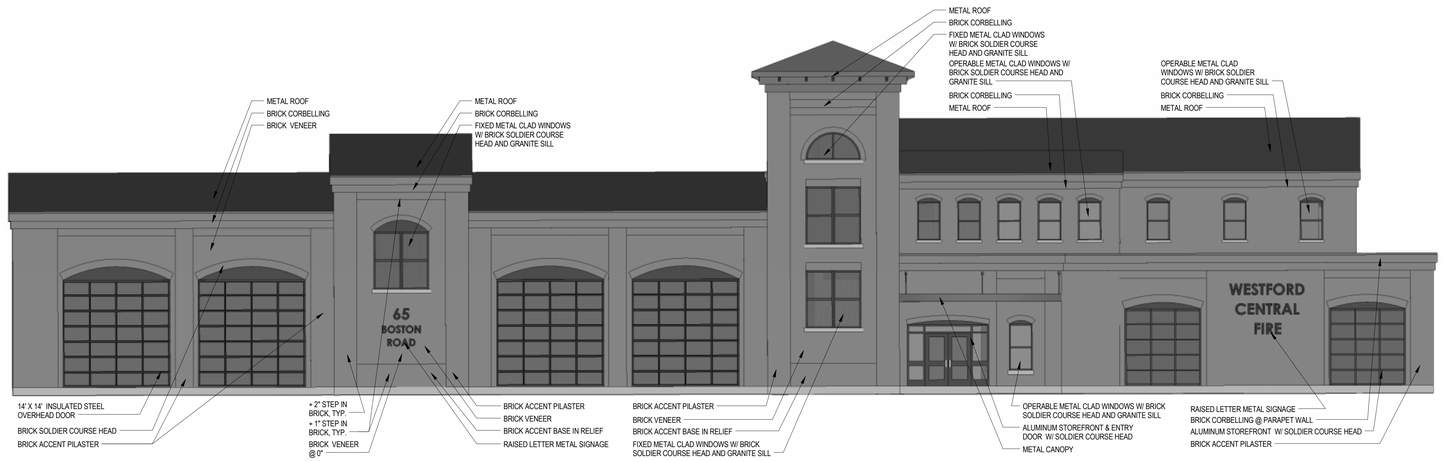

F9 EXTERIOR ELEVATION - NORTH
1/8" = 1'-0"

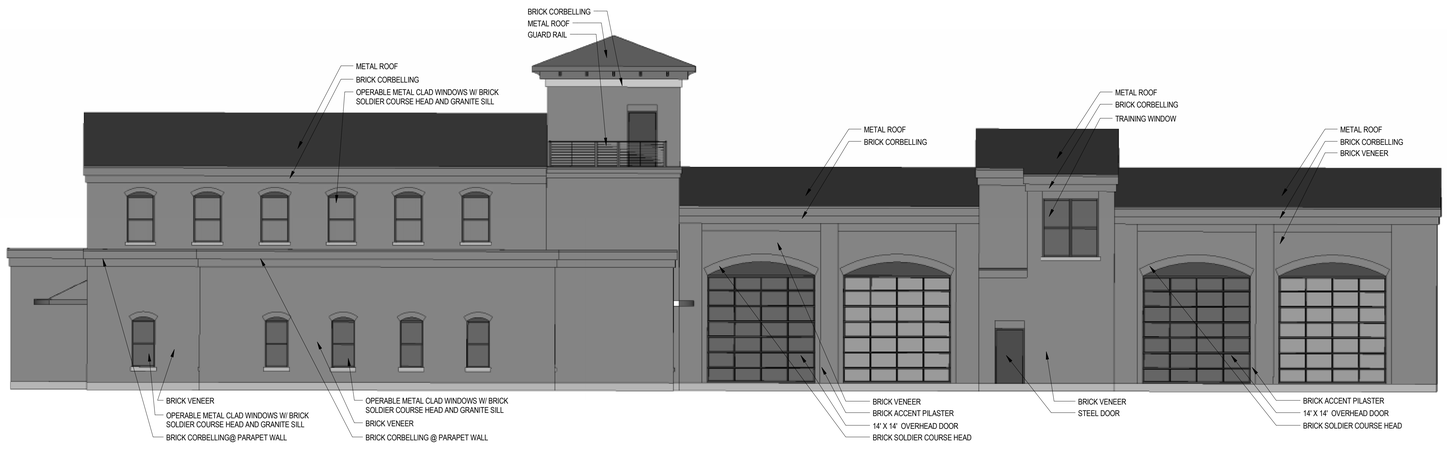

B9 EXTERIOR ELEVATION - SOUTH
1/8" = 1'-0"

0 4' 8' 16'
SCALE: 1/8"=1'-0" GRAPHIC SCALE

ARCHITECTS • PROJECT MANAGERS
Brattleboro, VT 05301
T : 802 257 5161
F : 802 863 1455
Newburyport, MA 01950
260 Merrimac Street, Bldg 7
T : 978 499 3940
F : 978 499 3944
www.doreandwhitter.com
DORE & WHITTER ARCHITECTS, INC.

Project No.
14-0690

WESTFORD FIRE STATION

65 Boston Road
Westford, MA 01886

COPYRIGHT © 2014 by Dore & Whitter Architects Inc. (D&W)
These documents are D&W's instruments of service and as such D&W retains all copyrights, common law and statutory rights. Use of these documents without D&W's express, written permission will result in copyright infringement.

SCHEMATIC DESIGN PRICING SET

REVISION:	Date:

DATE:	SCALE:
11/20/2015	As indicated
DRAWN BY: CR	CHKD BY: Checker

SHEET TITLE:
OVERALL EXTERIOR ELEVATIONS

SHEET #:
A4.10

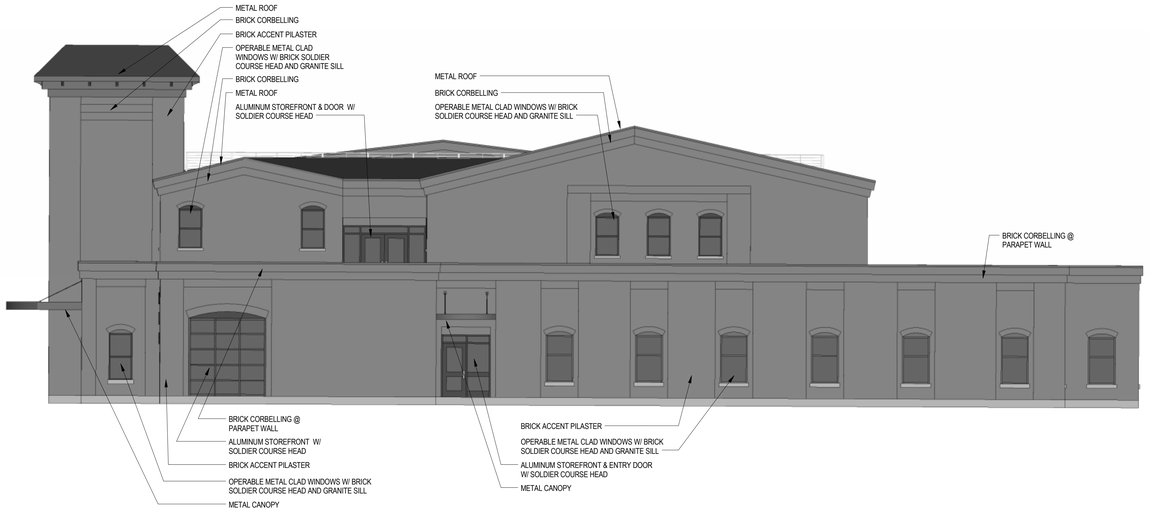

F9 EXTERIOR ELEVATION - WEST
1/8" = 1'-0"

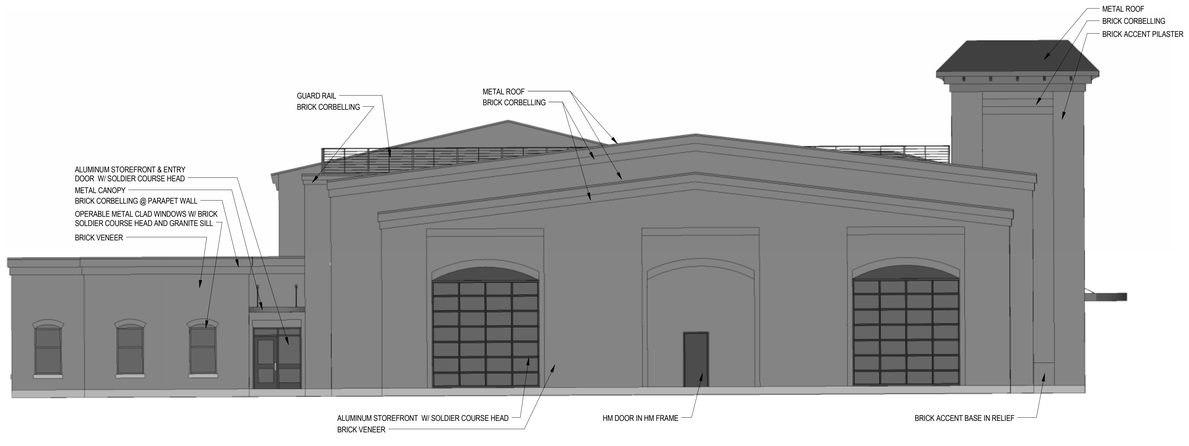

B9 EXTERIOR ELEVATION - EAST
1/8" = 1'-0"

0 4' 8' 16'
SCALE: 1/8"=1'-0" GRAPHIC SCALE

ARCHITECTS • PROJECT MANAGERS

Brattleboro, VT 05401
T : 802 . 257 . 5141
F : 802 . 863 . 1455
Newburyport, MA 01950
260 Merrimac Street, Bldg 7
Newburyport, MA 01950
T : 978 . 499 . 3940
F : 978 . 499 . 3944
www.doreandwhitter.com

DORE & WHITTER ARCHITECTS, INC.

Project No.
14-0690

WESTFORD FIRE STATION

65 Boston Road
Westford, MA 01886

COPYRIGHT © 2014 by Dore & Whitter Architects Inc. (D&W)
These documents are D&W's instruments of service and as such D&W retains all copyrights, common law and statutory rights. Use of these documents without D&W's express, written permission will result in copyright infringement.

SCHEMATIC DESIGN
PRICING SET

REVISION:	Date:

DATE:	SCALE:
11/20/2015	1/8" = 1'-0"
DRAWN BY: CR	CHKD BY: Checker

SHEET TITLE:
OVERALL EXTERIOR ELEVATIONS

SHEET #:
A4.11

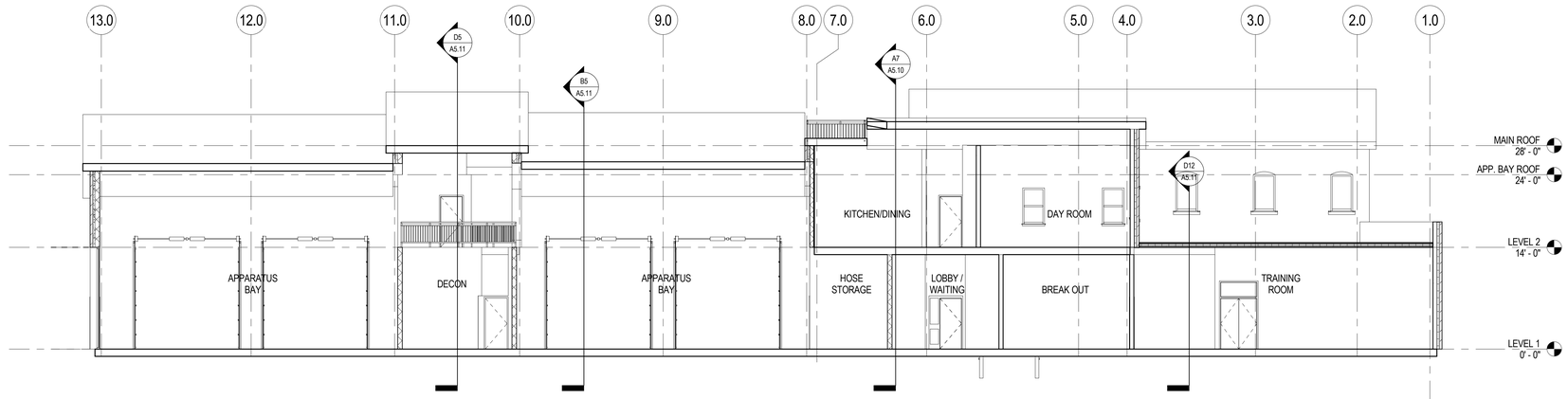

1 SECTION - TRAINING ROOM & APPARATUS BAYS
1/8" = 1'-0"

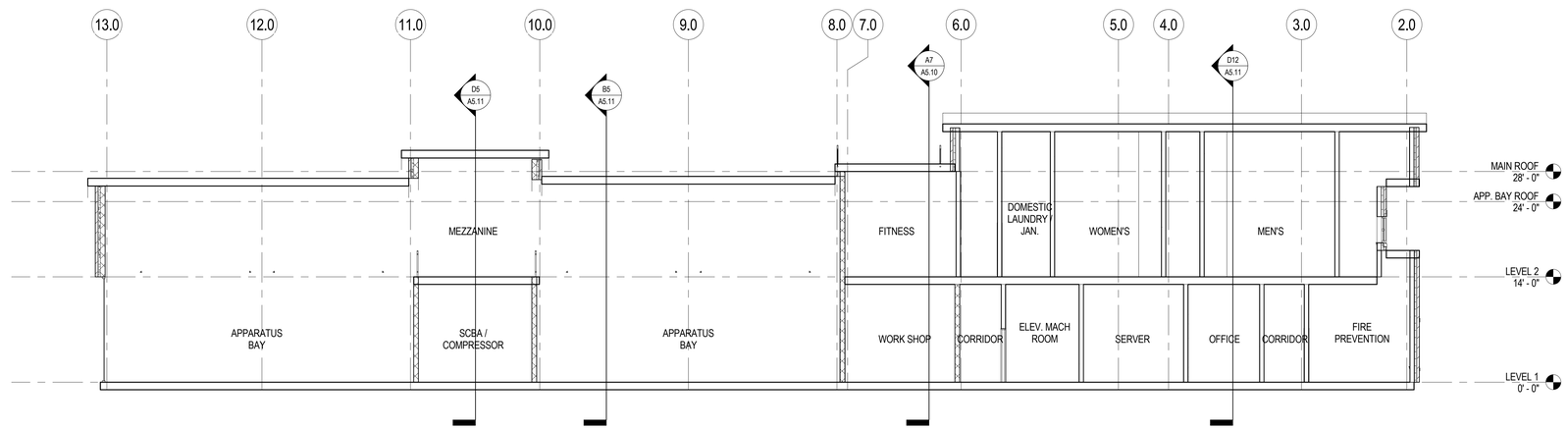

2 SECTION - ADMIN & APPARATUS BAYS
1/8" = 1'-0"

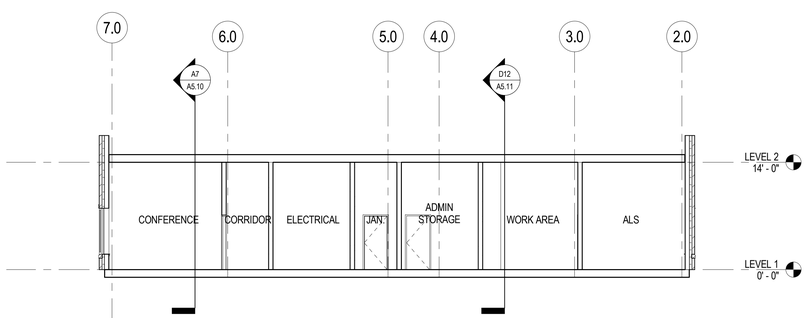

A12 SECTION - ADMIN
1/8" = 1'-0"

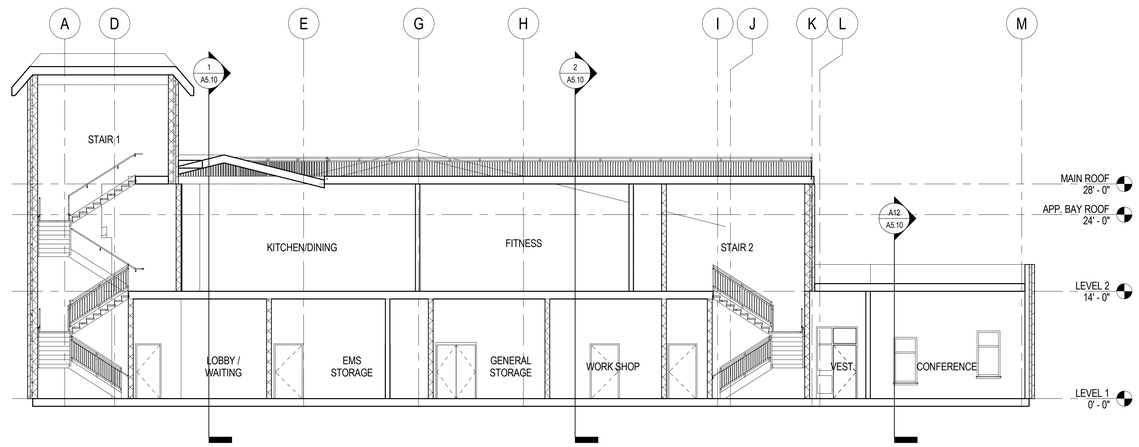

A7 SECTION - OPERATIONS SUPPORT & STAIRS
1/8" = 1'-0"

0 4' 8' 16'
SCALE: 1/8"=1'-0" GRAPHIC SCALE

C:\Users\creardon\Documents\ARCH - 690 - WESTFORD FIRE STATION_creardon.rvt

11/20/2015 11:29:50 AM

ARCHITECTS • PROJECT MANAGERS
Brattleboro, VT 05301
T : 802 . 863 . 1455
F : 802 . 863 . 1455
Newburyport, MA 01950
200 Merrimac Street, Bldg 7
T : 978 . 499 . 3940
F : 978 . 499 . 3944
www.doreandwhitter.com
DORE & WHITTER ARCHITECTS, INC.

Project No.
14-0690

WESTFORD FIRE STATION

65 Boston Road
Westford, MA 01886

COPYRIGHT © 2014 by Dore & Whitter Architects Inc. (D&W)
These documents are D&W's instruments of service and as such D&W retains all copyrights, common law and statutory rights. Use of these documents without D&W's express, written permission will result in copyright infringement.

SCHEMATIC DESIGN PRICING SET

REVISION:	Date:

DATE: 11/20/2015	SCALE: 1/8" = 1'-0"
DRAWN BY: Author	CHK'D BY: Checker

SHEET TITLE:
BUILDING SECTIONS

SHEET #:
A5.10

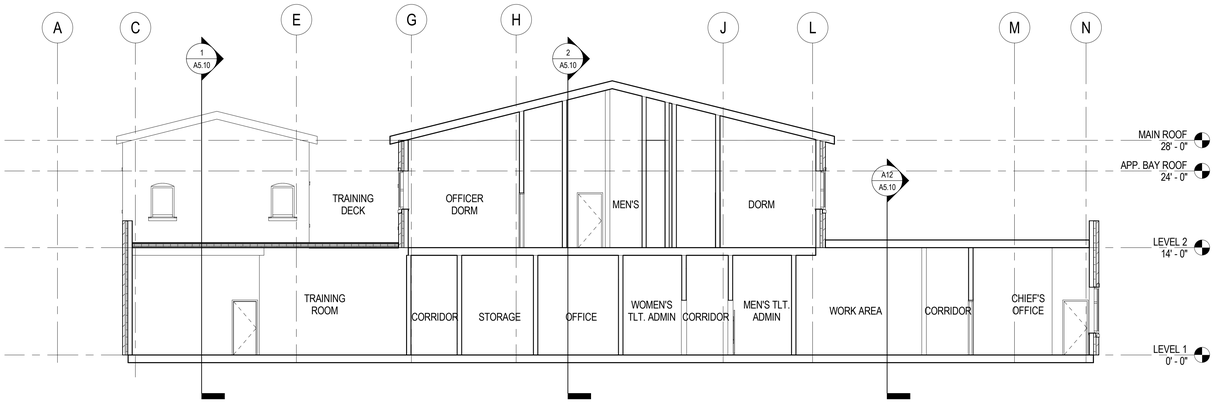

D12 SECTION - TRAINING ROOM & ADMIN
1/8" = 1'-0"

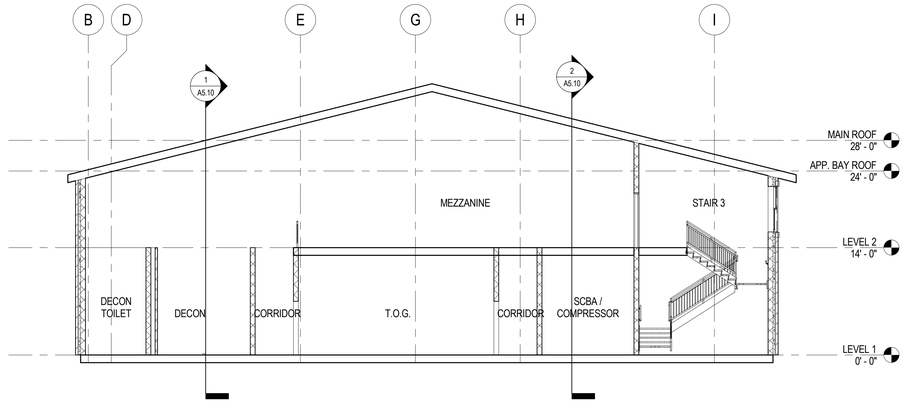

D5 SECTION - APPARATUS BAY SUPPORT SPACES
1/8" = 1'-0"

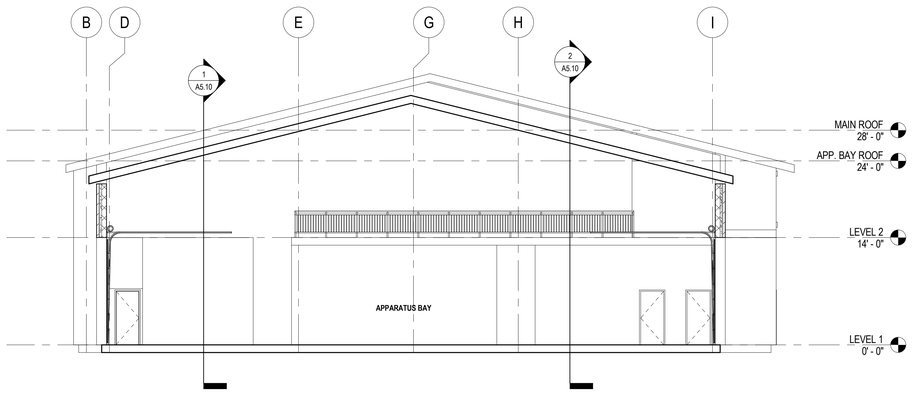

B5 SECTION - APPARATUS BAYS
1/8" = 1'-0"

0 4' 8' 16'
SCALE: 1/8"=1'-0" GRAPHIC SCALE

ARCHITECTS • PROJECT MANAGERS
Brattleboro, VT 05301
T : 802.257.5244
F : 802.863.1455
Newburyport, MA 01950
200 Merrimac Street, Bldg 7
Newburyport, MA 01950
T : 978.499.2944
F : 978.499.2944
www.doreandwhitter.com
DORE & WHITTER ARCHITECTS, INC.

Project No.
14-0690

WESTFORD FIRE STATION

65 Boston Road
Westford, MA 01886

COPYRIGHT © 2014 by Dore & Whitter Architects Inc. (D&W)
These documents are D&W's instruments of service and as such D&W retains all copyrights, common law and statutory rights. Use of these documents without D&W's express, written permission will result in copyright infringement.

SCHEMATIC DESIGN PRICING SET

REVISION:	Date:

DATE:	SCALE:
11/20/2015	1/8" = 1'-0"
DRAWN BY: CR	CHKD BY: Checker

SHEET TITLE:
BUILDING SECTIONS

SHEET #:
A5.11

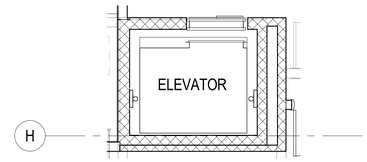

H8 ENLARGED PLAN - ELEVATOR - LEVEL 2
1/4" = 1'-0"

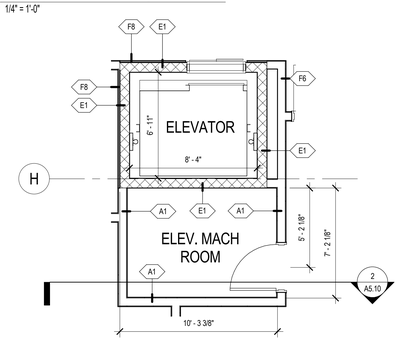

F8 ENLARGED PLAN - ELEVATOR - LEVEL 1
1/4" = 1'-0"

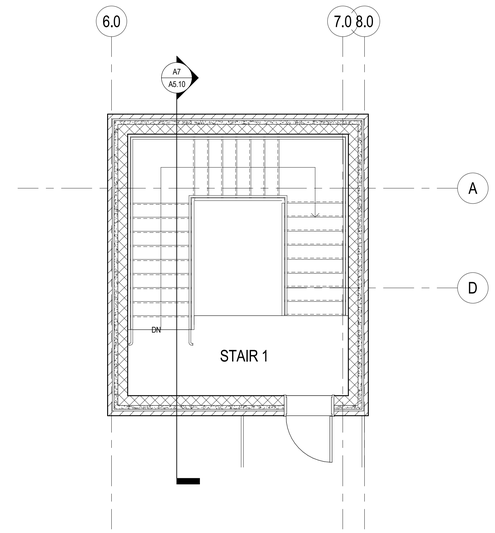

F5 ENLARGED PLAN - STAIR 1 - MAIN ROOF
1/4" = 1'-0"

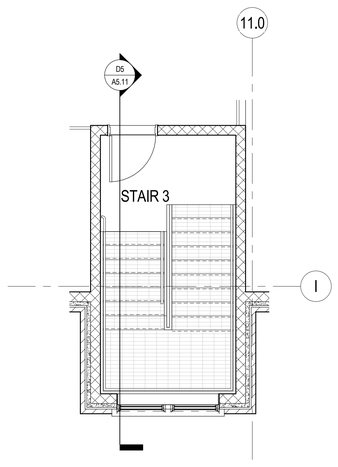

C12 ENLARGED PLAN - STAIR 3 - LEVEL 2
1/4" = 1'-0"

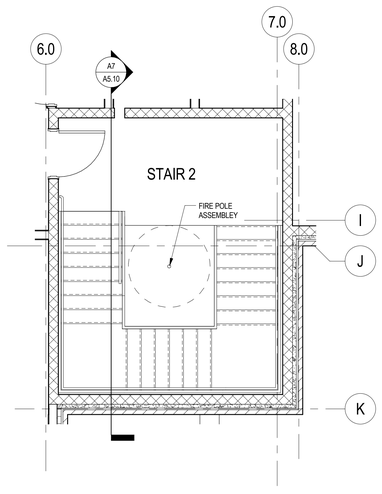

C8 ENLARGED PLAN - STAIR 2 - LEVEL 2
1/4" = 1'-0"

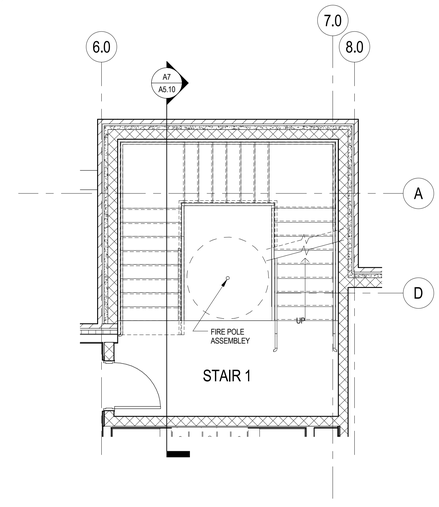

C5 ENLARGED PLAN - STAIR 1 - LEVEL 2
1/4" = 1'-0"

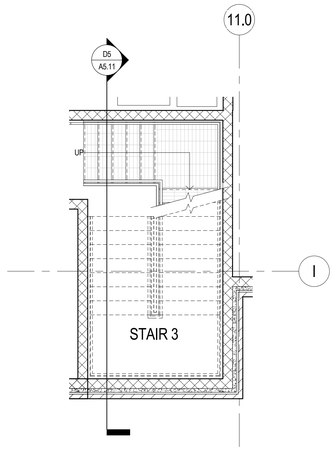

A12 ENLARGED PLAN - STAIR 3 - LEVEL 1
1/4" = 1'-0"

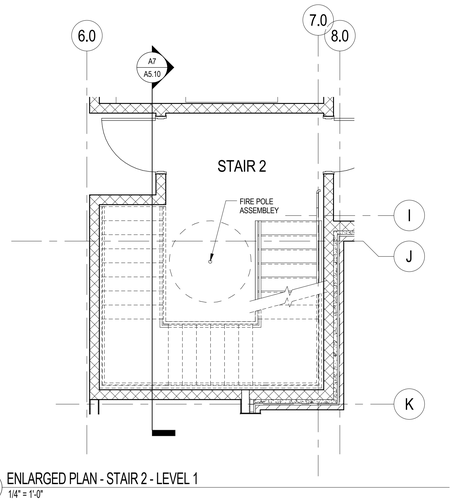

A8 ENLARGED PLAN - STAIR 2 - LEVEL 1
1/4" = 1'-0"

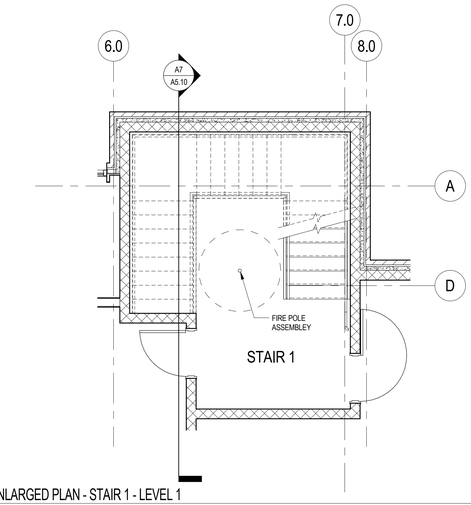

A5 ENLARGED PLAN - STAIR 1 - LEVEL 1
1/4" = 1'-0"

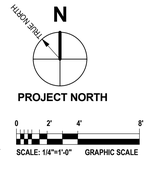

ARCHITECTS • PROJECT MANAGERS
Brattleboro, VT 05301
T : 802 . 257 . 5141
F : 802 . 863 . 1455
Northampton, MA 01060
T : 413 . 586 . 8686
F : 413 . 586 . 8686
Newburyport, MA 01950
260 Merrimac Street, Bldg 7
Newburyport, MA 01950
T : 978 . 499 . 3900
F : 978 . 499 . 3944
www.doreandwhitter.com
DORE & WHITTER
ARCHITECTS, INC.

Project No.
14-0690

WESTFORD FIRE STATION

65 Boston Road
Westford, MA 01886

COPYRIGHT © 2014 by Dore & Whitter Architects Inc. (D&W)
These documents are D&W's instruments of service and as such D&W retains all copyrights, common law and statutory rights. Use of these documents without D&W's express, written permission will result in copyright infringement.

SCHEMATIC DESIGN
PRICING SET

REVISION:	Date:

DATE: 11/20/2015	SCALE: 1/4" = 1'-0"
DRAWN BY: CR	CHK'D BY: Checker

SHEET TITLE:
STAIR & ELEVATOR PLANS & SECTIONS

SHEET #:
A7.01

LEGEND

SYMBOL	ABBREV	DESCRIPTION
F	F	FIRE LINE ABV. GRADE
F	F	FIRE LINE UNDERGROUND
SP	SP	SPRINKLER LINE (WET)
PA	PA	PREACTION SPRINKLER LINE (DRY)
SD	SD	SPRINKLER DRAIN
D	D	DRY SPRINKLER LINE (DRY)
EC		SIDEWALL SPRINKLER HEAD EXTENDED COVERAGE
		SIDEWALL SPRINKLER HEAD
EC		PENDANT SPRINKLER HEAD EXTENDED COVERAGE
		PENDANT SPRINKLER HEAD
I		INSTITUTIONAL PENDANT SPRINKLER HEAD
		EXPOSED UPRIGHT SPRINKLER HEAD
		CONCEALED PENDANT SPRINKLER HEAD IN CEILING
C		CONCEALED PENDANT SPRINKLER HEAD IN CLOUD
D		DRY SIDEWALL SPRINKLER HEAD
D		DRY PENDANT SPRINKLER HEAD IN CEILING
D		DRY EXPOSED UPRIGHT SPRINKLER HEAD
D		DRY CONCEALED PENDANT SPRINKLER HEAD IN CEILING
	DP,DN	PIPE DROP OR DOWN
	UP	PIPE RISE OR UP
		TEE LOOKING DOWN
		CAP ON END OF PIPE
		STRAINER
		UNION
	PG	PRESSURE GAGE
	CV	CHECK VALVE
	SCV	SUPERVISED CONTROL VALVE
	VIV	VALVE ON VERTICAL
	FDC	FIRE DEPARTMENT CONNECTION
	FS	FLOW SWITCH
	PIV	POST INDICATOR VALVE
	ABD	AUTOMATIC BALL DRIP
		PRESSURE RELIEF VALVE
		SLOPED PIPE
	WMG	WATER MOTOR GONG
	ITC	INSPECTORS TEST CONNECTION
	TYP.	TYPICAL
	AC	CONCEALED ABOVE CEILING
	@C	EXPOSED AT CEILING
	AP	ACCESS PANEL
	AFF	ABOVE FINISHED FLOOR
	F&I	FURNISH AND INSTALL
	PC	PLUMBING CONTRACTOR
	PA	PRE-ACTION
	FPC	FIRE PROTECTION CONTRACTOR
	GC	GENERAL CONTRACTOR
	HVAC	HEAT, VENT & AIR CONDITIONER. CONTRACTOR
	EC	ELECTRICAL CONTRACTOR
	DCVA	DOUBLE CHECK VALVE ASSEMBLY
	EXP	EXPOSED
	LPD	LOW POINT DRAIN
	FDV	FIRE DEPARTMENT VALVE
	FDVC	FIRE DEPT. VALVE CABINET
	FHC	FIRE HOSE CABINET
	SCVA	SPRINKLER FLOOR CONTROL VALVE ASSEMBLY
NAS		NO AUTOMATIC SPRINKLERS
T	TS	TAMPER (SUPERVISORY) SWITCH
F	FS	FLOW SWITCH
PS	PS	PRESSURE SWITCH
	ITS	REMOTE INSPECTORS TEST STATION
		HYDRAULIC NODE POINT DESIGNATION

FLOOR	
ZONE	SYSTEM TYPE
HAZARD CLASSIFICATION	
DENSITY GPM	AREA OF APPLICATION SQ.FT.
HOSE ALLOWANCE GPM	COVERAGE PER HEAD (SQ.FT.)
REMARKS:	

DENOTES SPRINKLER DESIGN CRITERIA

DENOTES SPRINKLER ZONE BOUNDARY

NOTE: NOT ALL SYMBOLS LISTED ARE APPLICABLE TO THIS PROJECT.

GENERAL NOTES

1. THE WORK HEREIN REQUIRED INCLUDES A HYDRAULICALLY DESIGNED SPRINKLER SYSTEM AS SPECIFIED IN THE DOCUMENTS AND AS APPROVED BY THE ARCHITECT.
2. THE FIRE PROTECTION DRAWINGS ARE DIAGRAMMATIC AND ARE TO BE USED FOR THE PURPOSE OF ESTABLISHING GENERAL LOCATIONS OF PIPING RUNS, SIZES OF PIPING, AND QUANTITIES OF FIXTURES AND EQUIPMENT TO BE FURNISHED HEREIN. REFER TO ARCHITECTURAL DRAWINGS FOR DIMENSIONS FOR EXACT LOCATIONS OF ALL SPRINKLER HEADS, AND EQUIPMENT, INCLUDING MOUNTING HEIGHTS. IN THE EVENT OF CONFLICT OR IF DIMENSIONS ARE NOT SHOWN, OBTAIN FIELD DIRECTIVE FROM THE ARCHITECT AS TO THE LOCATIONS OF ALL VISIBLE EQUIPMENT.
3. ALL PIPING SHOWN ON THESE PLANS OR THOSE TO BE DESIGNED HEREIN SHALL BE RUN CONCEALED ABOVE SUSPENDED CEILINGS, IN CHASES, OR IN PARTITIONS UNLESS SPECIFICALLY NOTED OTHERWISE.
4. ALL SPRINKLER HEADS IN CEILING TILES SHALL BE LOCATED IN THE EXACT CENTER OF TILE UNLESS SPECIFICALLY APPROVED OTHERWISE BY THE ARCHITECT.
5. REFER TO ARCHITECTURAL REFLECTED CEILING PLANS FOR CEILING HEIGHTS AND CEILING MATERIALS AND LAYOUTS. REFER TO THE RESPECTIVE PLUMBING, HVAC AND ELECTRICAL DRAWINGS FOR LIGHTING, DIFFUSER AND REGISTER LAYOUTS IN CEILINGS AND FOR PIPING, DUCTWORK AND EQUIPMENT ABOVE CEILINGS FOR COORDINATION PURPOSES. IN THE EVENT OF CONFLICT OR IF DIMENSIONS ARE NOT SHOWN, OBTAIN FIELD DIRECTIVE FROM THE ARCHITECT AS TO THE LOCATIONS OF ALL VISIBLE EQUIPMENT.
6. ATTENTION IS CALLED TO THE REQUIREMENT FOR THE PREPARATION OF COORDINATION DRAWINGS. IN ADDITION TO THE PREPARATION OF SHOP DRAWINGS ALSO PREPARE COORDINATION DRAWINGS AS OUTLINED IN THE SPECIFICATION. THE APPROVAL OF THE SHOP DRAWINGS INCLUDING DIMENSIONS SHOWN THEREIN DOES NOT RELIEVE THE CONTRACTOR.
7. SPECIFIC ATTENTION IS DIRECTED TO THE REQUIREMENTS OF STATE BUILDING CODE AND NFPA 241-2004 REGARDING THE MAINTENANCE OF FIRE PROTECTION SYSTEMS INCLUDING STANDPIPES AND BULK FIRE MAINS BOTH DURING CONSTRUCTION. MAINTAIN THE SYSTEMS AS REQUIRED BY THESE STANDARDS AS A MINIMUM.
8. THE SPRINKLER CONTRACTOR SHALL PROVIDE AS PART OF HIS CONTRACT AN INSPECTOR'S TEST STATION ON EACH SPRINKLER ZONE. THE INSPECTOR'S TEST STATION WILL BE LOCATED AT THE MOST HYDRAULICALLY REMOTE PART OF EACH ZONE AND SHALL BE IDENTIFIED ON THE SPRINKLER SHOP DRAWINGS.
9. REFER TO NFPA 13 TABLE 8.3.2.5(a) FOR TEMPERATURE RATING OF SPRINKLERS BASED ON DISTANCE FROM HEAT SOURCES SUCH AS HEATING DUCTS, DIFFUSERS AND UNIT HEATERS.

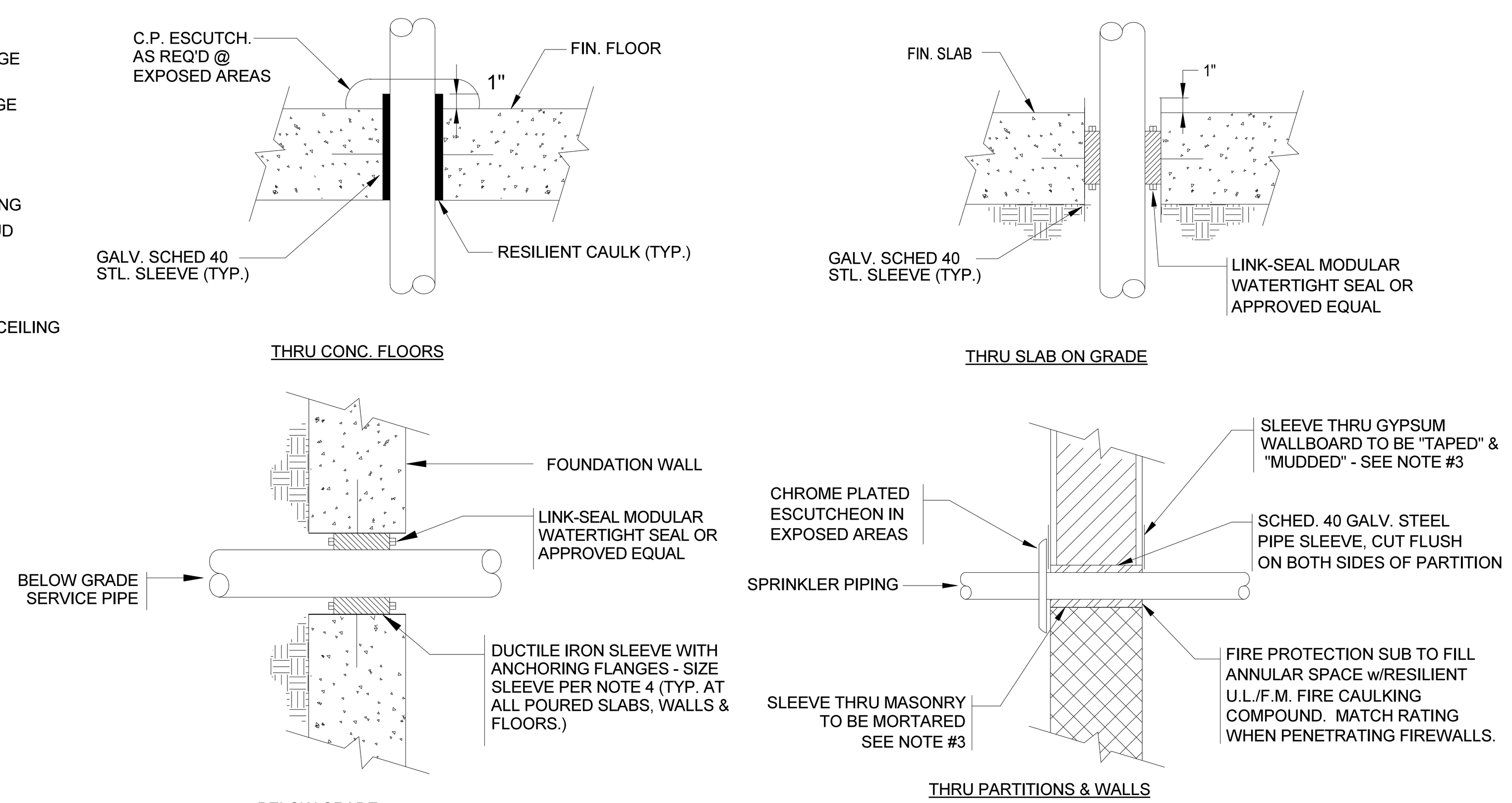

1 / F0.01 TYPICAL SLEEVE CONDITION DETAILS

N.T.S.

NOTE:

1. ALL PIPING PENETRATING ALL PARTITIONS, WHETHER FIRE OR SMOKE RATED OR NOT, CONCEALED OR EXPOSED, SHALL BE SLEEVED AS DETAILED.
2. WHERE CONCRETE WALLS, SLABS, ETC., ARE CORE DRILLED, INSTALL SLEEVE FLUSH WITH BOTH SIDES, CAULKED & LEADED IN PLACE.
3. REFER TO DIVISION 4 & 9 FOR PROCEDURES & METHODS OF PATCHING AROUND SLEEVES AT GYPSUM, PLASTER & MASONRY. REFER TO SPECS FOR DELINEATION OF RESPONSIBILITY.
4. SLEEVES SHALL BE SIZED TO PROVIDE MIN. 1" CLEARANCE BETWEEN PIPE O.D. & SLEEVE I.D. FOR PIPING UP TO 3" IN SIZE. PROVIDE 2" CLEARANCE BETWEEN PIPE O.D. & SLEEVE I.D. FOR PIPING 4" IN SIZE AND GREATER.

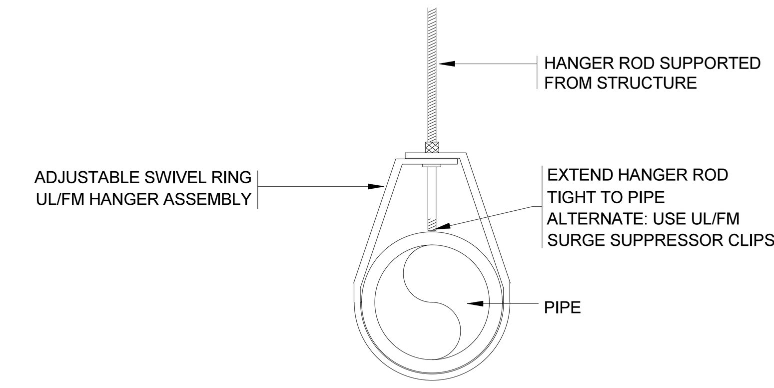

2 / F0.01 TYPICAL END-OF-LINE BRANCH PIPE HANGER DETAIL

N.T.S.

NOTE: TO BE USED AT ALL END-OF-LINE BRANCH HANGERS THROUGHOUT PROJECT

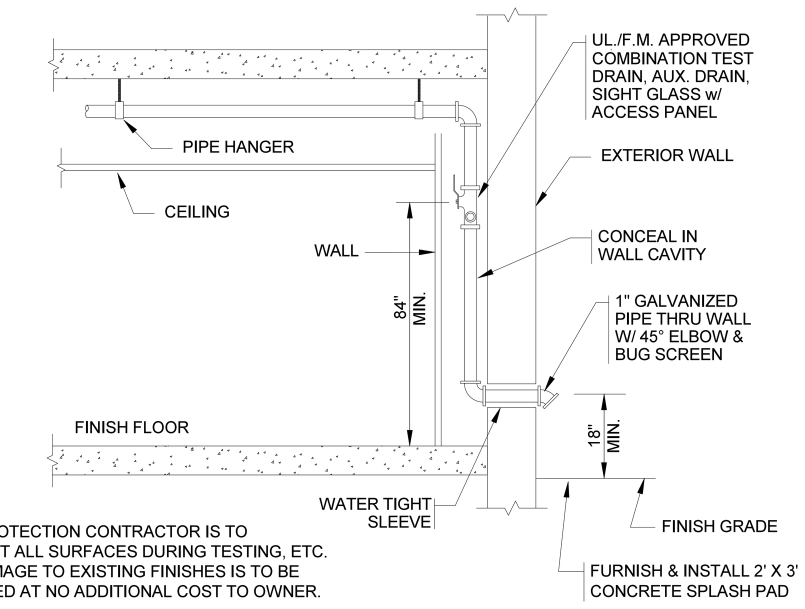

NOTE:

FIRE PROTECTION CONTRACTOR IS TO PROTECT ALL SURFACES DURING TESTING, ETC. ALL DAMAGE TO EXISTING FINISHES IS TO BE REPAIRED AT NO ADDITIONAL COST TO OWNER.

5 / F0.01 INSPECTOR'S TEST STATION PIPING SCHEMATIC

N.T.S.

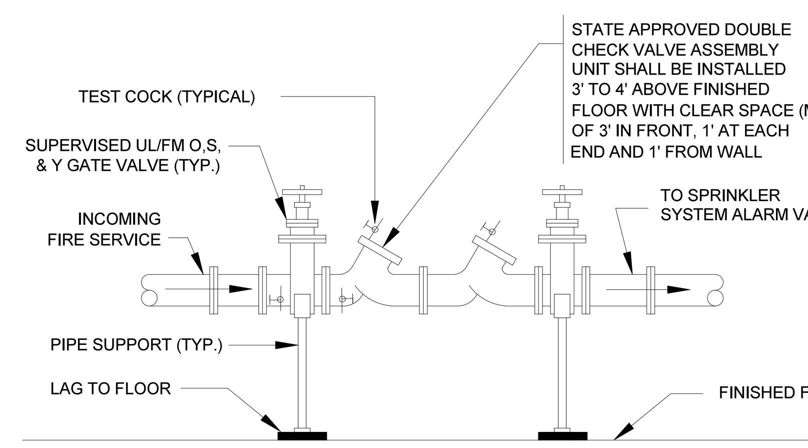

4 / F0.01 DOUBLE CHECK VALVE ASSEMBLY (DCVA) DETAIL

SCALE: N.T.S.

NOTES:

1. SUPPORT PIPING AND FITTINGS AS REQUIRED TO CONFORM TO MANUFACTURERS AND OR CODE REQUIREMENTS.

2. MATERIALS AND METHODS FOR THIS INSTALLATION SHALL CONFORM TO ALL STATE & U.S. PUBLIC HEALTH SERVICES CODES AND REGULATIONS

3. FILE FOR AND OBTAIN ALL REQUIRED APPROVALS & PERMITS PRIOR TO INSTALLATION

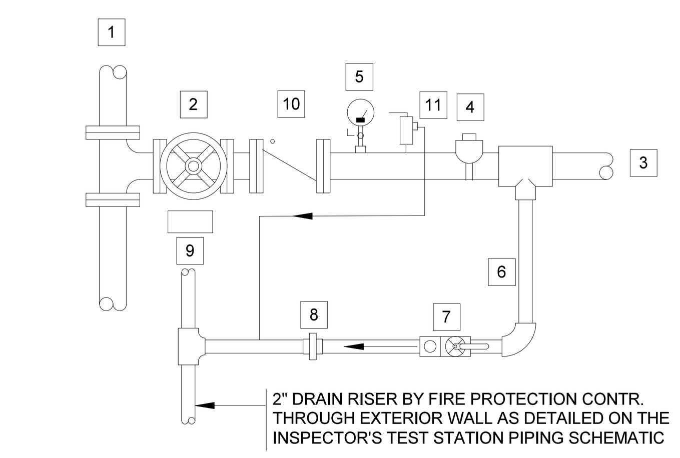

1	COMBINATION F/SP. STANDPIPE	7	U.L. LISTED COMBINATION TEST DRAIN, AUX. DRAIN, AND SIGHT GLASS
2	UL/FM INDICATING TYPE CONTROL VALVE	8	UNION
3	TO SPRINKLER SYSTEM	9	IDENTIFICATION SIGN
4	WATERFLOW SWITCH	10	UL/FM CHECK VALVE
5	PRESSURE GAUGE WITH COCK	11	3/4" RELIEF VALVE PROVIDE ON ASSEMBLIES WITH PRESSURE RESTRICTING & CHECK VALVES
6	1" DRAIN LINE		

4 / FP1.01 SPRINKLER CONTROL VALVE ASSEMBLY (SCVA) DETAIL

SCALE: N.T.S.

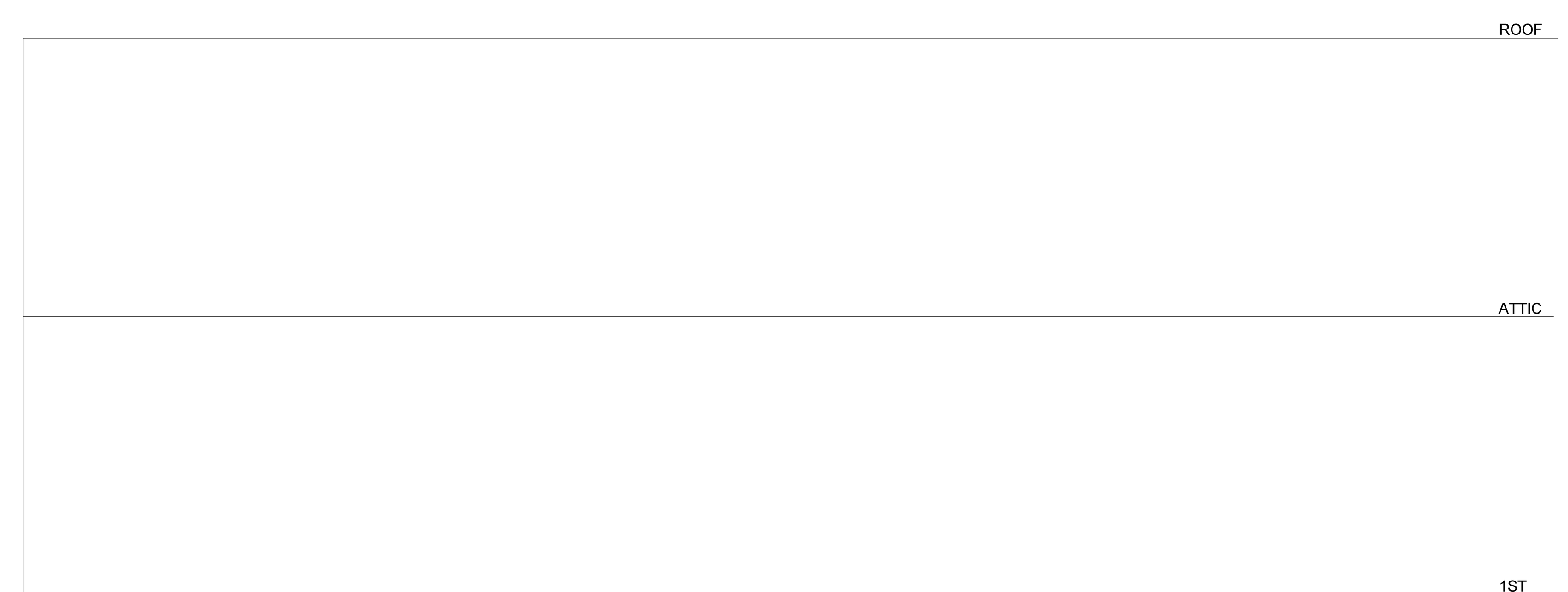

6 / F0.02 FIRE PROTECTION RISER DIAGRAM

N.T.S.

GARCIA GALUSKA DESOUSA INC.
CONSULTING ENGINEERS
370 Faunce Corner Road, Dartmouth, MA 02747 - 1271
508 - 998 - 5700 FAX 508 - 998 - 0883 E - MAIL info@g - g - d . com

ARCHITECTS • PROJECT MANAGERS
DORE & WHITTIER ARCHITECTS, INC.
Burlington, VT 05401
212 Battery Street
P : 802.863.1428
F : 802.863.6955
Newburyport, MA 01950
260 Merrimac Street, Bldg 7
P : 978.499.2999
F : 978.499.2944
www.doreandwhittier.com

Project No. 14-690

WESTFORD FIRE STATION

65 Boston Road
Westford, MA 01886

COPYRIGHT © 2014 by Dore & Whittier Architects Inc. (D&W) These documents are D&W's instruments of service and as such D&W retains all copyrights, common law and statutory rights. Use of these documents without D&W's express, written permission will result in copyright infringement.

SCHEMATIC DESIGN

REVISION:	Date:

DATE: 11/21/2015
SCALE:
DRAWN BY: Author
CHK'D BY: Checker

SHEET TITLE: Fire Protection Legend, Details, and Notes

SHEET #: FP001

C:\Users\stevin_moniz\Documents\MEP - 690 - WESTFORD FIRE STATION_stevin_moniz.rvt

11/20/2015 5:19:48 PM

1 First Floor Fire Protection
1/8" = 1'-0"

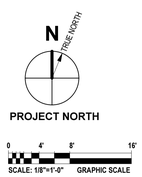

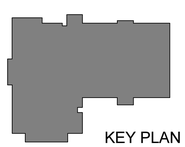

KEY PLAN

GARCIA GALUSKA DESOUSA
CONSULTING ENGINEERS
375 Totten Pond Road, Waltham, MA 02451
508 - 968 - 5700 FAX 508 - 968 - 0983 E - MAIL info@g - g - d . com

ARCHITECTS • PROJECT MANAGERS
Brattleboro, VT 05401
T : 802 . 257 . 5141
F : 802 . 863 . 1435
Northampton, MA 01060
T : 413 . 586 . 8686
F : 413 . 586 . 8690
Newburyport, MA 01950
260 Merrimac Street, Bldg 7
Newburyport, MA 01950
T : 978 . 499 . 9000
F : 978 . 499 . 3944
www.doreandwhitter.com
DORE & WHITTER ARCHITECTS, INC.

Project No.
14-690

WESTFORD FIRE STATION

65 Boston Road
Westford, MA 01886

COPYRIGHT © 2014 by Dore & Whitter Architects Inc. (D&W). These documents are D&W's instruments of service and as such D&W retains all copyrights, common law and statutory rights. Use of these documents without D&W's express, written permission will result in copyright infringement.

SCHEMATIC DESIGN

REVISION:	Date:

DATE: 11/21/2015	SCALE: 1/8" = 1'-0"
DRAWN BY: Author	CHKD BY: Checker

SHEET TITLE:
Fire Protection
First Floor

SHEET #
FP101

C:\Users\stevin_moniz\Documents\MEP - 690 - WESTFORD FIRE STATION_stevin_moniz.rvt
11/20/2015 5:19:49 PM

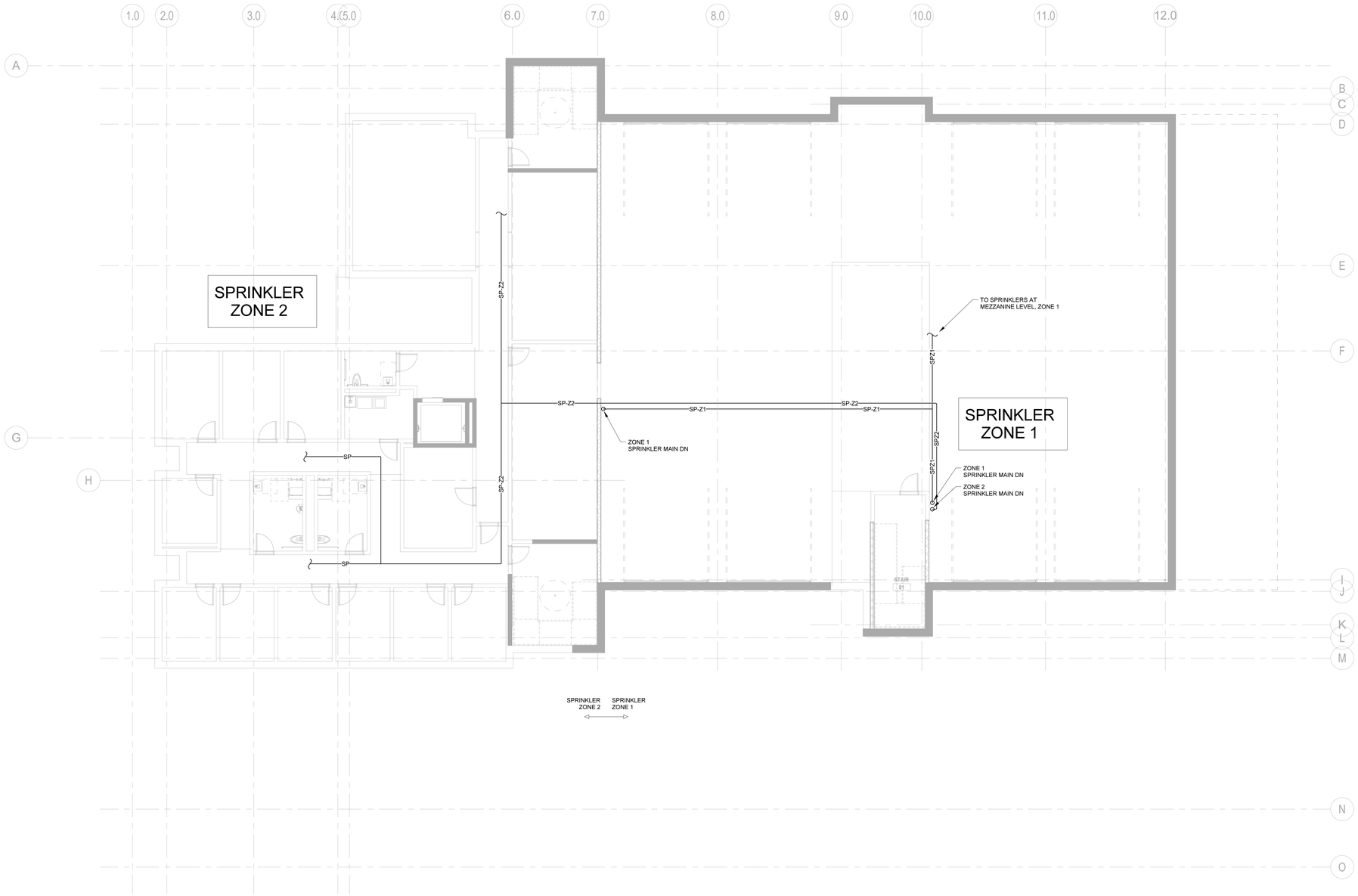

1 Second Floor Fire Protection
1/8" = 1'-0"

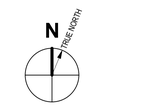

PROJECT NORTH

0 4' 8' 16'
SCALE: 1/8"=1'-0" GRAPHIC SCALE

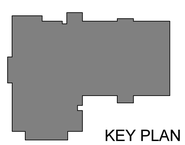

KEY PLAN

GARCIA GALUSKA DESOUSA
CONSULTING ENGINEERS
375 Totten Pond Road, Waltham, MA 02451 - 1921
508 - 998 - 5700 FAX 508 - 998 - 0883 E - MAIL info@g - g - d . com

ARCHITECTS • PROJECT MANAGERS
DORE & WHITTIER ARCHITECTS, INC.
Brattleboro, VT 05401
T : 802 . 257 . 5161
F : 802 . 863 . 1435
Northampton, MA 01060
T : 413 . 586 . 8686
F : 413 . 586 . 8690
Newburyport, MA 01950
200 Merrimac Street, Bldg 7
Newburyport, MA 01950
T : 978 . 499 . 2040
F : 978 . 499 . 2944
www.doreandwhittier.com

Project No.
14-690

WESTFORD FIRE STATION

65 Boston Road
Westford, MA 01886

COPYRIGHT © 2014 by Dore & Whittier Architects Inc. (D&W)
These documents are D&W's instruments of service and as such D&W retains all copyrights, common law and statutory rights. Use of these documents without D&W's express, written permission will result in copyright infringement.

SCHEMATIC DESIGN

REVISION:	Date:

DATE: 11/21/2015	SCALE: 1/8" = 1'-0"
DRAWN BY: Author	CHK'D BY: Checker

SHEET TITLE:
Fire Protection
Second Floor

SHEET #:
FP102

11/20/2015 5:19:50 PM C:\Users\stevin_moniz\Documents\MEP - 690 - WESTFORD FIRE STATION_stevin_moniz.rvt

LEGEND

SYMBOL	ABBREV	DESCRIPTION
	NEW	NEW WORK (DARK)
	EX	EXISTING WORK (LIGHT)
	S/W	SOIL/WASTE ABV. GRADE
	S/W	SOIL/WASTE UNDERGROUND
	V	VENT ABV. GRADE
	V	VENT UNDERGROUND
IW	IW	INDIRECT WASTE
	RL	RAIN LEADER ABV. GRADE
	RL	RAIN LEADER UNDERGROUND
	CW	COLD WATER
	HW	HOT WATER
	HWR	HOT WATER RETURN
140°	HW 140°	HOT WATER 140°F
140°	HWR 140°	HOT WATER RETURN 140°F
G	G	FUEL GAS PIPING
	DP.DN	PIPE DROP OR DOWN
	UP	PIPE RISE OR UP
		TEE LOOKING DOWN
		CAP ON END OF PIPE
	FD RD AD	FLOOR DRAIN, ROOF DRAIN, AREA DRAIN
		STRAINER
		UNION
	CO	CLEANOUT
	DCO	DANDY CLEANOUT
	FCO	FLOOR CLEANOUT
	PG/TG	PRESSURE GAGE/TEMPERATURE GAGE
	SA	SHOCK ABSORBER
		BALANCING VALVE
	BV	BALL VALVE
	CV	CHECK VALVE
		GAS COCK
		GAS PRESSURE REGULATOR
		SOLENOID VALVE
	GV	GATE VALVE
	PRV	PRESSURE REDUCING VALVE
	VOV	VALVE ON VERTICAL
	PT	P-TRAP
	S&W	STOP & WASTE VALVE
	EL	EXPANSION LOOP
		PIPE GUIDE
		PIPE ANCHOR
		FLOW IN DIRECTION OF ARROW
	HB/WH	HOSE BIBB/WALL HYDRANT
GW	GW	GARAGE WASTE
GV	GV	GARAGE VENT
TP	TP	TRAP PRIMER
TW	TW	TEMPERED WATER
	TYP.	TYPICAL
	FFE	FINISHED FLOOR ELEVATION
	INV	INVERT ELEVATION
	VTR	VENT THRU ROOF
	AVTR	ACID VENT THRU ROOF
	AP	ACCESS PANEL
	AFF	ABOVE FINISHED FLOOR
	AFG	ABOVE FINISHED GRADE
	FG	FINISHED GRADE
	CI	CAST IRON
	CP	CHROME PLATED
	UC	UNDER COUNTER
	F&I	FURNISH AND INSTALL
	PC	PLUMBING CONTRACTOR
	FPC	FIRE PROTECTION CONTRACTOR
	GC	GENERAL CONTRACTOR
	HVAC	HEAT, VENT & AIR COND. CONTRACTOR
	DCVA	DOUBLE CHECK VALVE ASSEMBLY
	RPBP	REDUCED PRESSURE BACKFLOW PREVENTOR
	STK	STACK
	STP	STANDPIPE
	EXP	EXPOSED
	FBO	FURNISHED BY OTHERS

NOTE: NOT ALL SYMBOLS LISTED ARE APPLICABLE TO THIS PROJECT

GENERAL NOTES

1. THE PLUMBING DRAWINGS ARE DIAGRAMMATIC AND ARE TO BE USED FOR THE PURPOSE OF ESTABLISHING GENERAL LOCATIONS OF PIPING RUNS, SIZES OF PIPING, AND QUANTITIES OF FIXTURES AND EQUIPMENT TO BE FURNISHED HEREIN. REFER TO ARCHITECTURAL DRAWINGS FOR DIMENSIONS FOR EXACT LOCATIONS OF ALL PLUMBING FIXTURES, AND EQUIPMENT, INCLUDING FLOOR DRAINS, AND MOUNTING HEIGHTS. IN THE EVENT OF CONFLICT OR IF DIMENSIONS ARE NOT SHOWN, OBTAIN FIELD DIRECTIVE FROM THE ARCHITECT AS TO THE LOCATIONS OF ALL VISIBLE EQUIPMENT. PAY PARTICULAR CARE TO COORDINATE WITH THE ARCHITECT'S FIELD REPRESENTATIVE ALL FLOOR DRAIN AND FLOOR CLEANOUT LOCATIONS.
2. ALL PIPING SHOWN ON THIS PLAN SHALL BE RUN CONCEALED ABOVE SUSPENDED CEILINGS, IN CHASES, OR IN PARTITIONS UNLESS SPECIFICALLY NOTED OTHERWISE.
3. EXISTING CONDITIONS INDICATING PIPING AND EQUIPMENT LOCATIONS ARE TAKEN FROM ENGINEERING FIELD NOTES AND DRAWINGS OF THE ORIGINAL BUILDING CONSTRUCTION ARE TO BE CONSIDERED APPROXIMATE ONLY. FIELD VERIFY POINTS OF CONNECTIONS OF NEW TO EXISTING BEFORE INSTALLING ANY PIPE OR EQUIPMENT. BRING ANY DISCREPANCY TO THE ATTENTION OF THE ARCHITECT.
4. INSTALL ALL NEW VALVES SO AS TO BE EASILY ACCESSIBLE AND OPERABLE.
5. WHERE REMOVAL OF EXISTING FIXTURES, EQUIPMENT AND PIPING IS INDICATED CUT AND CAP ALL EXISTING PIPING TO BEYOND THE NEW FINISHED SURFACE SO NO EVIDENCE OF PREVIOUS INSTALLATION WILL REMAIN.
6. MAINTAIN PLUMBING SYSTEMS IN OTHER BUILDING AREAS AT ALL TIMES DURING THE CONSTRUCTION. REFER TO PHASING PLANS AND SPECIFICATIONS ON THE ARCHITECT'S DRAWINGS & SPECIFICATIONS.
7. THE PLUMBING DRAWINGS ARE INTENDED TO INDICATE THE SIZING AND DESIGN FOR THE MAIN SUPPLY AND WASTE PIPING AND FOCUSES ON RUNS AND SIZES OF THE MAIN RISERS, STACKS AND VENT TERMINATION. IT IS NOT INTENDED TO INDICATE EVERY TRAP AND FIXTURE CONNECTION. PARTICULARLY IN THE CASE OF GANG TOILETS. CONTRACTOR IS REQUIRED TO PROVIDE ALL CONNECTIONS, TO MAKE ALL CONNECTIONS TO ALL DRAINS AND FIXTURES WHICH ARE SHOWN AND SCHEDULED ON THE PLUMBING DRAWINGS.

SHOCK ABSORBER SCHEDULE

PDI SYMBOL	A	B	C	D	E	F
ZURN SERIES 1250-XL OR EQ.	A	B	C	D	E	F
FIXTURE UNITS	1-11	12-32	33-60	61-113	114-154	155-330

PIPE SIZE TO FIXTURE SCHEDULE

P. NO.	FIXTURE	S/W	VENT	CW	HW	TW	REMARKS

PLUMBING ELECTRICAL EQUIPMENT

UNIT NO.	UNIT FUNCTION	UNIT LOCATION	MOTOR				REMARKS
			HP	V	PH	AMP	

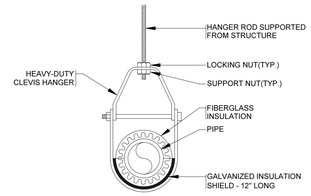

1 / P001 TYPICAL PIPE HANGER DETAIL
N.T.S.

THIS DETAIL INDICATES HANGING OF INSULATED PIPING WHICH MAY BE EITHER WATER OR STORM DRAIN. CLEVIS HANGER DETAIL APPLIES TO ALL PLUMBING PIPING ON THIS PROJECT.

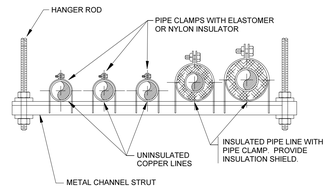

2 / P001 TRAPEZE PIPE HANGER
N.T.S.

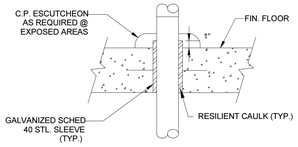

THRU CONC. FLOORS
N.T.S.

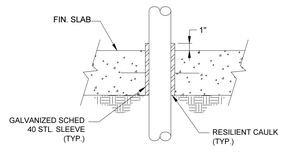

THRU SLAB ON GRADE
N.T.S.

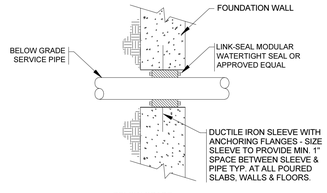

BELOW GRADE
N.T.S.

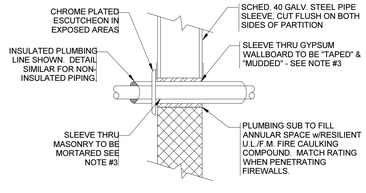

THRU PARTITIONS & WALLS
N.T.S.

3 / P001 TYPICAL PLUMBING SLEEVE CONDITION DETAILS
N.T.S.

NOTE:
1. ALL PIPING PENETRATING ALL PARTITIONS, WHETHER FIRE OR SMOKE RATED OR NOT, CONCEALED OR EXPOSED, SHALL BE SLEEVED AS DETAILED.
2. WHERE CONC. WALLS, SLABS, ETC., ARE CORE DRILLED, INSTALL SLEEVE FLUSH WITH BOTH SIDES, CAULKED & LEADED IN PLACE.
3. REFER TO DIVISION 4 & 9 FOR PROCEDURES & METHODS OF PATCHING AROUND SLEEVES AT GYPSUM, PLASTER & MASONRY. REFER TO SPECS FOR DELINEATION OF RESPONSIBILITY
4. SLEEVES SHALL BE SIZED TO PROVIDE MIN. 1" CLEARANCE BETWEEN PIPE O.D. & SLEEVE I.D.

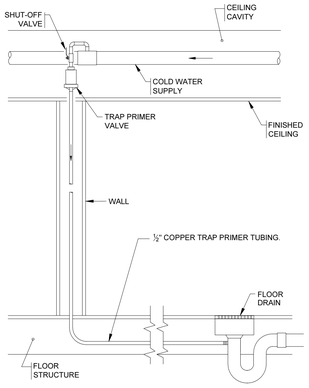

4 / P001 TRAP PRIMER PIPING DETAIL
N.T.S.

GARCIA GALUSKA DESOUSA
CONSULTING ENGINEERS
37 Stiles Road, Salem, NH 03079
TEL: 508-998-5700 FAX: 508-998-0883 E-MAIL: info@g-g-d.com
MEP: FIRE PROTECTION

ARCHITECTS • PROJECT MANAGERS
Braintree, VT 05401
P: 802.763.8348
F: 802.763.8349
Northampton, MA 01060
260 Merrimac Street, Bldg 7
P: 978.499.9949
F: 978.499.3944
www.doreandwhitter.com
DORE & WHITTER ARCHITECTS, INC.

Project No. 14-690

WESTFORD FIRE STATION

65 Boston Road
Westford, MA 01886

COPYRIGHT © 2014 by Dore & Whitter Architects Inc. (D&W) These documents are D&W's instruments of service and as such D&W retains all copyrights, common law and statutory rights. Use of these documents without D&W's express, written permission will result in copyright infringement.

SCHEMATIC DESIGN

REVISION:	Date:

DATE: 11/21/2015
SCALE:
DRAWN BY: Author
CHKD BY: Checker

SHEET TITLE: Plumbing Legend, Details, and Notes

SHEET # P001

C:\Users\stevin_moniz\Documents\MEP - 690 - WESTFORD FIRE STATION_stevin_moniz.rvt
11/20/2015 5:19:50 PM

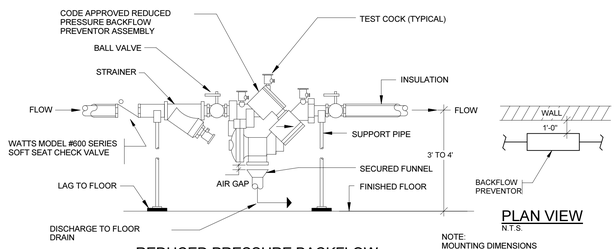

PLAN VIEW
N.T.S.

NOTE:
MOUNTING DIMENSIONS APPLY TO DOUBLE CHECK & REDUCED PRESSURE TYPE BACKFLOW PREVENTORS

REDUCED PRESSURE BACKFLOW PREVENTOR ASSEMBLY DETAIL(R.P.B.P.)

1 / P002 N.T.S.

NOTES:
1. LOCATE BACKFLOW PREVENTOR 3' TO 4' ABOVE FINISHED FLOOR, 1' FROM WALL AND EASILY ACCESSIBLE.
2. MATERIALS AND METHODS FOR THIS INSTALLATION SHALL CONFORM TO ALL STATE AND U.S. PUBLIC HEALTH SERVICES CODES AND REGULATIONS.
3. FILE FOR AND OBTAIN ALL REQUIRED APPROVALS AND PERMITS PRIOR TO INSTALLATION

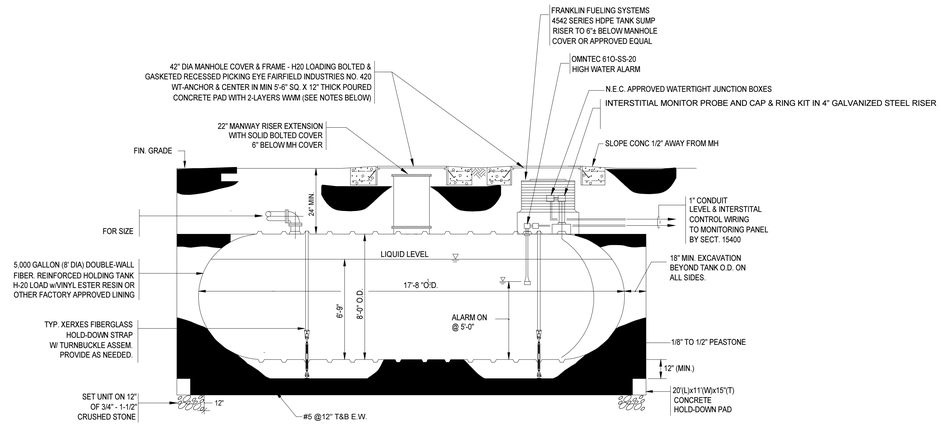

SPECIAL WASTE HOLDING TANK DETAIL (10,000 GAL. CAP.)

2 / P002 N.T.S.

NOTES:
1. MANHOLE FRAMES AND GRATES SHALL BE FURNISHED BY THE PLUMBING CONTRACTOR AND INSTALLED BY THE GENERAL CONTRACTOR.
2. ATTACH WEATHERPROOF SIGNAGE TO MANHOLES OR PADS INDICATING "INDUSTRIAL WASTE PUMP OUT MANHOLE" AND "MONITORING EQUIPMENT."

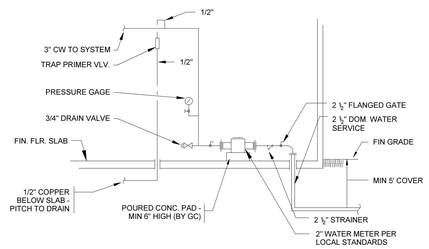

SCHEMATIC WATER SERVICE PIPING

4 / P002 N.T.S.

GARCIA GALUSKA DESOUSA
CONSULTING ENGINEERS
375 Totten Pond Road, Waltham, MA 02451 - MCP
508 - 998 - 5700 FAX 508 - 998 - 0983 E - MAIL info@g - g - d . com

ARCHITECTS • PROJECT MANAGERS
Burlington, VT 05401
P : 802 863 1455
F : 802 863 1456
Northampton, MA 01060
260 Meadow Street, Bldg 7
P : 978 499 1949
F : 978 499 1944
www.doreandwhitter.com
DORE & WHITTIER ARCHITECTS, INC.

Project No. 14-690

WESTFORD FIRE STATION

65 Boston Road
Westford, MA 01886

COPYRIGHT © 2014 by Dore & Whitter Architects Inc. (D&W). These documents are D&W's instruments of service and as such D&W retains all copyrights, common law and statutory rights. Use of these documents without D&W's express, written permission will result in copyright infringement.

SCHEMATIC DESIGN

REVISION:	Date:

DATE:	SCALE:
11/21/2015	
DRAWN BY: Author	CHK'D BY: Checker

SHEET TITLE:
Plumbing Details Continued

SHEET #:
P002

11/20/2015 5:19:51 PM C:\Users\stevin_moniz\Documents\MEP - 690 - WESTFORD FIRE STATION_stevin_moniz.rvt

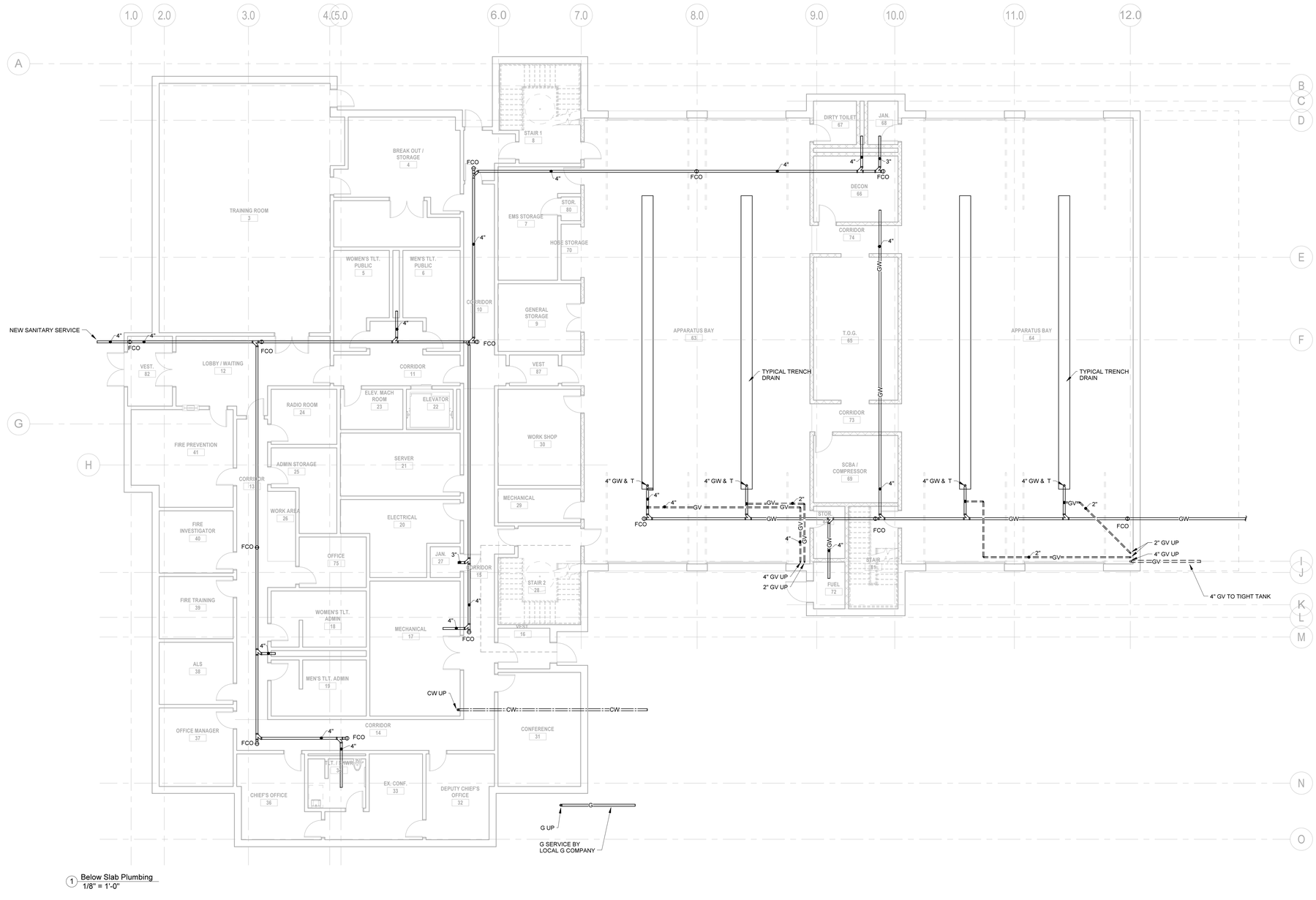

1 Below Slab Plumbing
1/8" = 1'-0"

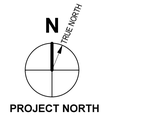

PROJECT NORTH

0 4' 8' 16'
SCALE: 1/8"=1'-0" GRAPHIC SCALE

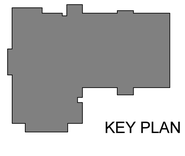

KEY PLAN

GARCIA GALUSKA DESOUSA
CONSULTING ENGINEERS
375 Totten Pond Road, Waltham, MA 02451 - 1921
508 - 998 - 5700 FAX 508 - 998 - 0983 E - MAIL info@g - g - d . com

ARCHITECTS • PROJECT MANAGERS
Burlington, VT 05401
T : 802 863 1455
F : 802 863 1458
Northampton, MA 01060
260 Meadow Street, Bldg 7
T : 413 586 0860
F : 978 499 2944
www.doreandwhitter.com
DORE & WHITTER ARCHITECTS, INC.

Project No
14-690

WESTFORD FIRE STATION

65 Boston Road
Westford, MA 01886

COPYRIGHT © 2014 by Dore & Whitter Architects Inc. (D&W). These documents are D&W's instruments of service and as such are the property of D&W, subject to its statutory rights. Use of these documents without D&W's express, written permission will result in copyright infringement.

SCHEMATIC DESIGN

REVISION:	Date:

DATE: 11/21/2015	SCALE: 1/8" = 1'-0"
DRAWN BY: Author	CHKD BY: Checker

SHEET TITLE:
Plumbing Below Slab

SHEET #
P100

11/20/2015 5:19:52 PM C:\Users\stevin_moniz\Documents\MEP - 690 - WESTFORD FIRE STATION_stevin_moniz.rvt

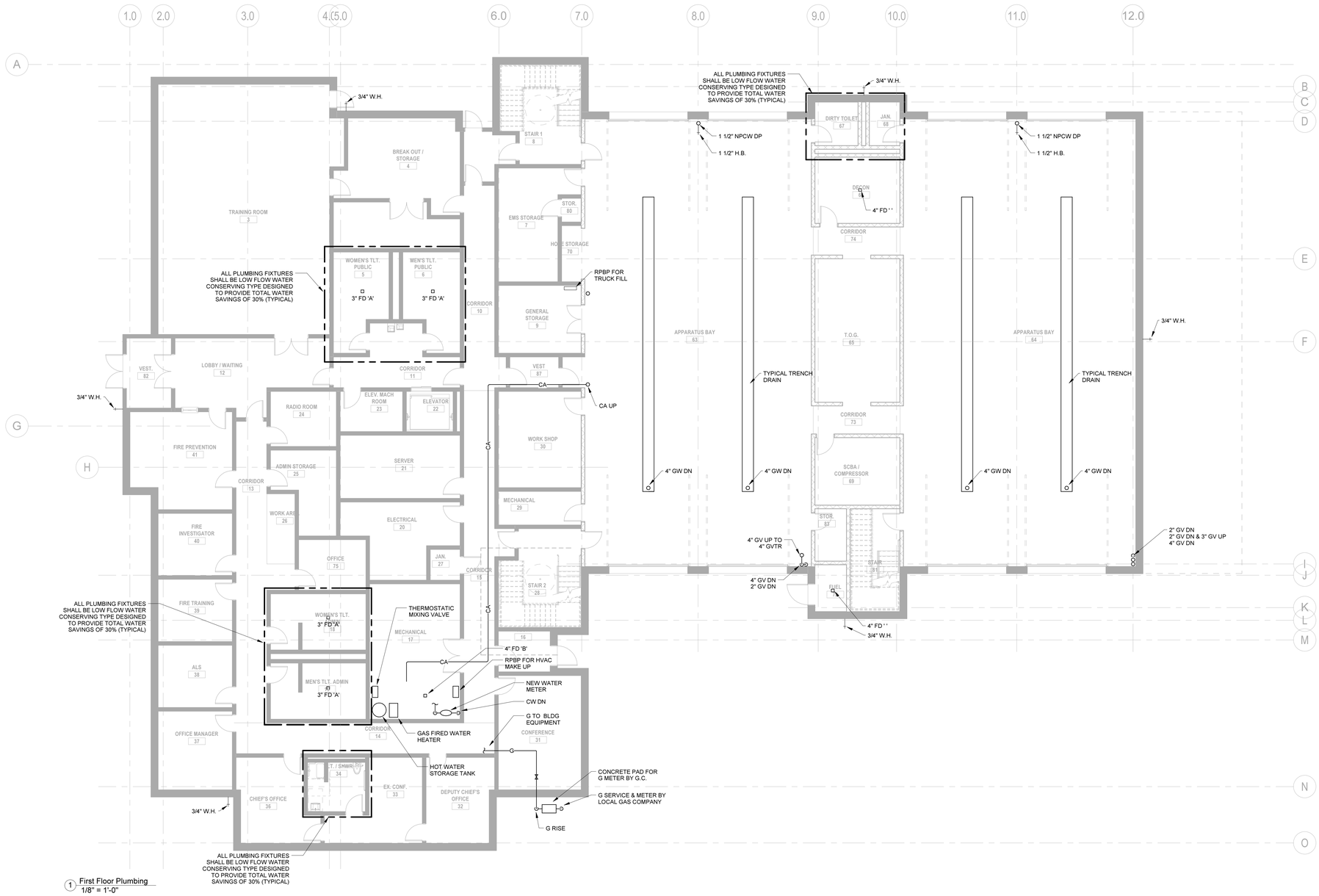

1 First Floor Plumbing
1/8" = 1'-0"

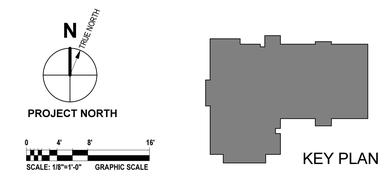

GARCIA GALUSKA DESOUSA
CONSULTING ENGINEERS
37 Stillwater Avenue, Beverly, MA 01915
508 - 998 - 2700 FAX 508 - 998 - 0883 E - MAIL info@g - g - d . com

ARCHITECTS • PROJECT MANAGERS
Bridgeport, VT 05401
T : 802.863.1435
F : 802.863.1436
Newburyport, MA 01950
260 Merrimac Street, Bldg 7
T : 978.499.2940
F : 978.499.2944
www.doreandwhittier.com
DORE & WHITTIER ARCHITECTS, INC.

Project No.
14-690

WESTFORD FIRE STATION

65 Boston Road
Westford, MA 01886

COPYRIGHT © 2014 by Dore & Whitter Architects Inc. (D&W). These documents are D&W's instruments of service and as such D&W retains all copyrights, common law and statutory rights. Use of these documents without D&W's express, written permission will result in copyright infringement.

SCHEMATIC DESIGN

REVISION:	Date:

DATE:	SCALE:
11/21/2015	1/8" = 1'-0"
DRAWN BY: Author	CHKD BY: Checker

SHEET TITLE:
Plumbing First Floor

SHEET #:
P101

11/20/2015 5:19:53 PM C:\Users\stevin_moniz\Documents\MEP - 690 - WESTFORD FIRE STATION_stevin_moniz.rvt

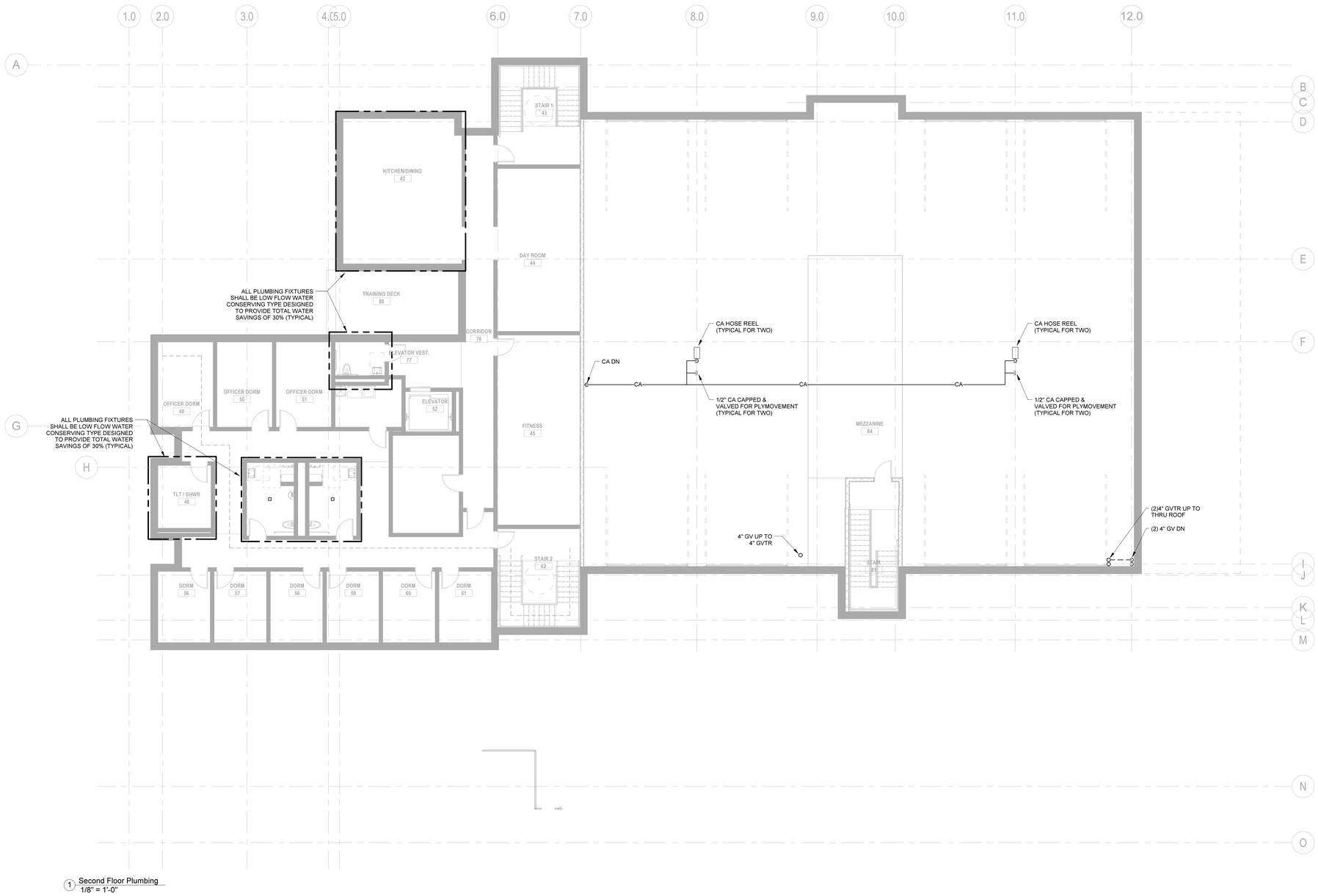

1 Second Floor Plumbing
1/8" = 1'-0"

PROJECT NORTH

0 4' 8' 16'
SCALE: 1/8"=1'-0" GRAPHIC SCALE

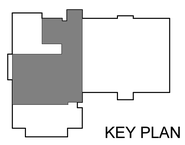

KEY PLAN

GARCIA GALUSKA DESOUSA
CONSULTING ENGINEERS
37 Offices Square, Lowell, MA 02747 - MCI
508 - 968 - 5700 FAX 508 - 968 - 0983 E - MAIL info@g - g - d . com

ARCHITECTS • PROJECT MANAGERS
Burlington, VT 05401
T : 802 863 1455
F : 802 863 1435
Northampton, MA 01060
260 Meadow Street, Bldg 7
T : 413 586 0860
F : 978 499 3944
www.dore-andwhittier.com
DORE & WHITTIER ARCHITECTS, INC.

Project No.
14-690

WESTFORD FIRE STATION

65 Boston Road
Westford, MA 01886

COPYRIGHT © 2014 by Dore & Whittier Architects Inc. (D&W). These documents are D&W's instruments of service and as such remain the property of D&W subject to statutory rights. Use of these documents without D&W's express, written permission will result in copyright infringement.

SCHEMATIC DESIGN

REVISION:	Date:

DATE: 11/21/2015	SCALE: 1/8" = 1'-0"
DRAWN BY: Author	CHKD BY: Checker

SHEET TITLE:
Plumbing
Second Floor

SHEET #
P102

11/20/2015 5:19:53 PM C:\Users\stevin_moniz\Documents\MEP - 690 - WESTFORD FIRE STATION_stevin_moniz.rvt

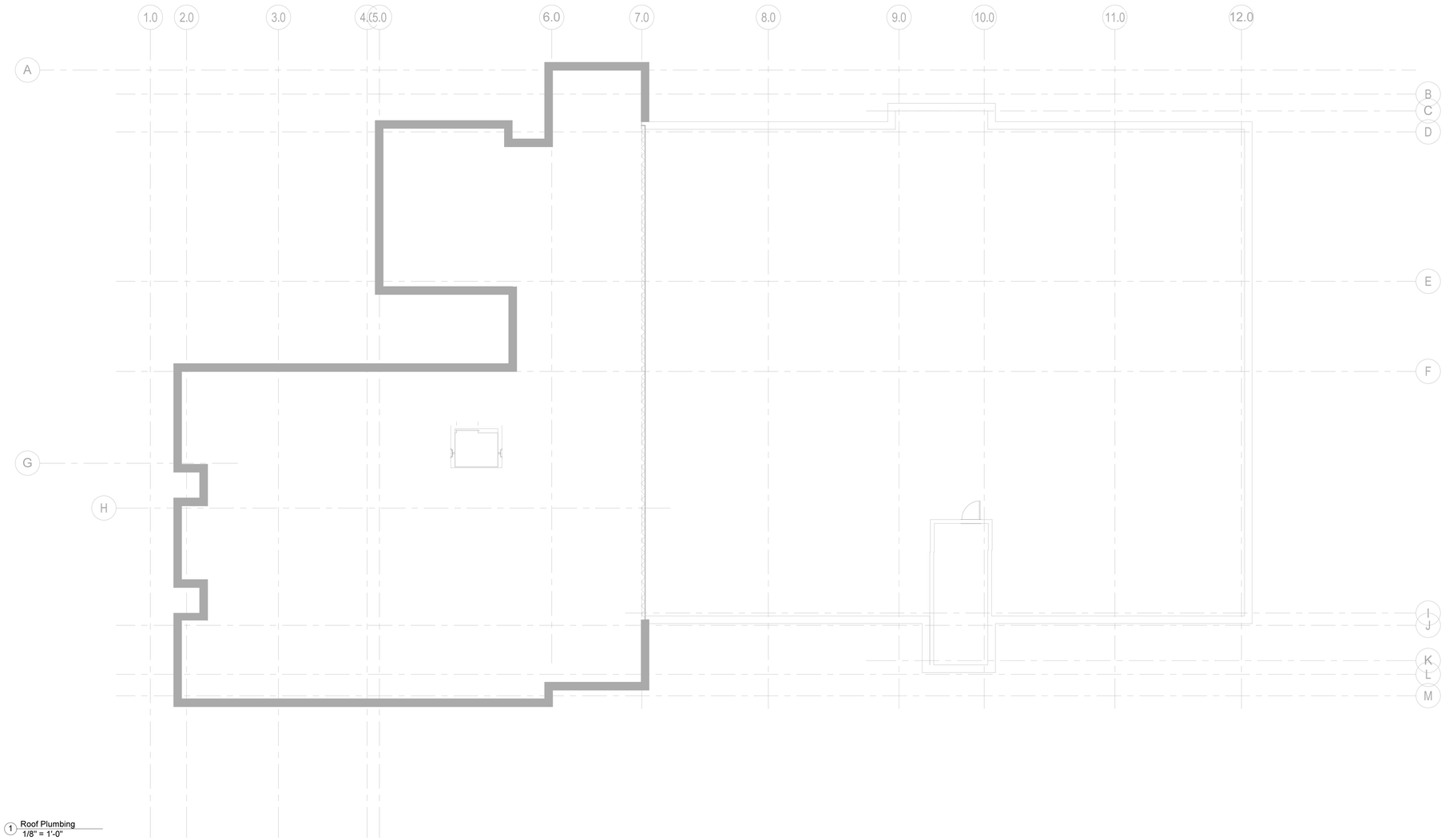

1 Roof Plumbing
1/8" = 1'-0"

N
TRUE NORTH
PROJECT NORTH

SCALE: 1/32"=1'-0" GRAPHIC SCALE

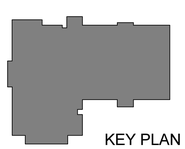

KEY PLAN

C:\Users\stevin_moniz\Documents\MEP - 690 - WESTFORD FIRE STATION_stevin_moniz.rvt

11/20/2015 5:19:54 PM

GARCIA GALUSKA DESOUSA
CONSULTING ENGINEERS
375 Totten Pond Road, Waltham, MA 02451 - 1021
508 - 988 - 5700 FAX 508 - 988 - 0883 E - MAIL info@g - g - d . com

ARCHITECTS • PROJECT MANAGERS
Brattleboro, VT 05401
T : 802 . 257 . 5157
F : 802 . 863 . 1435
T : 802 . 257 . 5157
Newburyport, MA 01950
260 Merrimac Street, Bldg 7
Newburyport, MA 01950
T : 978 . 499 . 2040
F : 978 . 499 . 2944
www.doreandwhittier.com
DORE & WHITTIER
ARCHITECTS, INC.

Project No.
14-690

WESTFORD FIRE STATION

65 Boston Road
Westford, MA 01886

COPYRIGHT © 2014 by Dore & Whittier Architects Inc. (D&W). These documents are D&W's instruments of service and as such D&W retains all copyrights, common law and statutory rights. Use of these documents without D&W's express, written permission will result in copyright infringement.

SCHEMATIC DESIGN

REVISION:	Date:

DATE: 11/21/2015	SCALE: 1/8" = 1'-0"
DRAWN BY: Author	CHKD BY: Checker

SHEET TITLE:
Plumbing Roof

SHEET #
P104

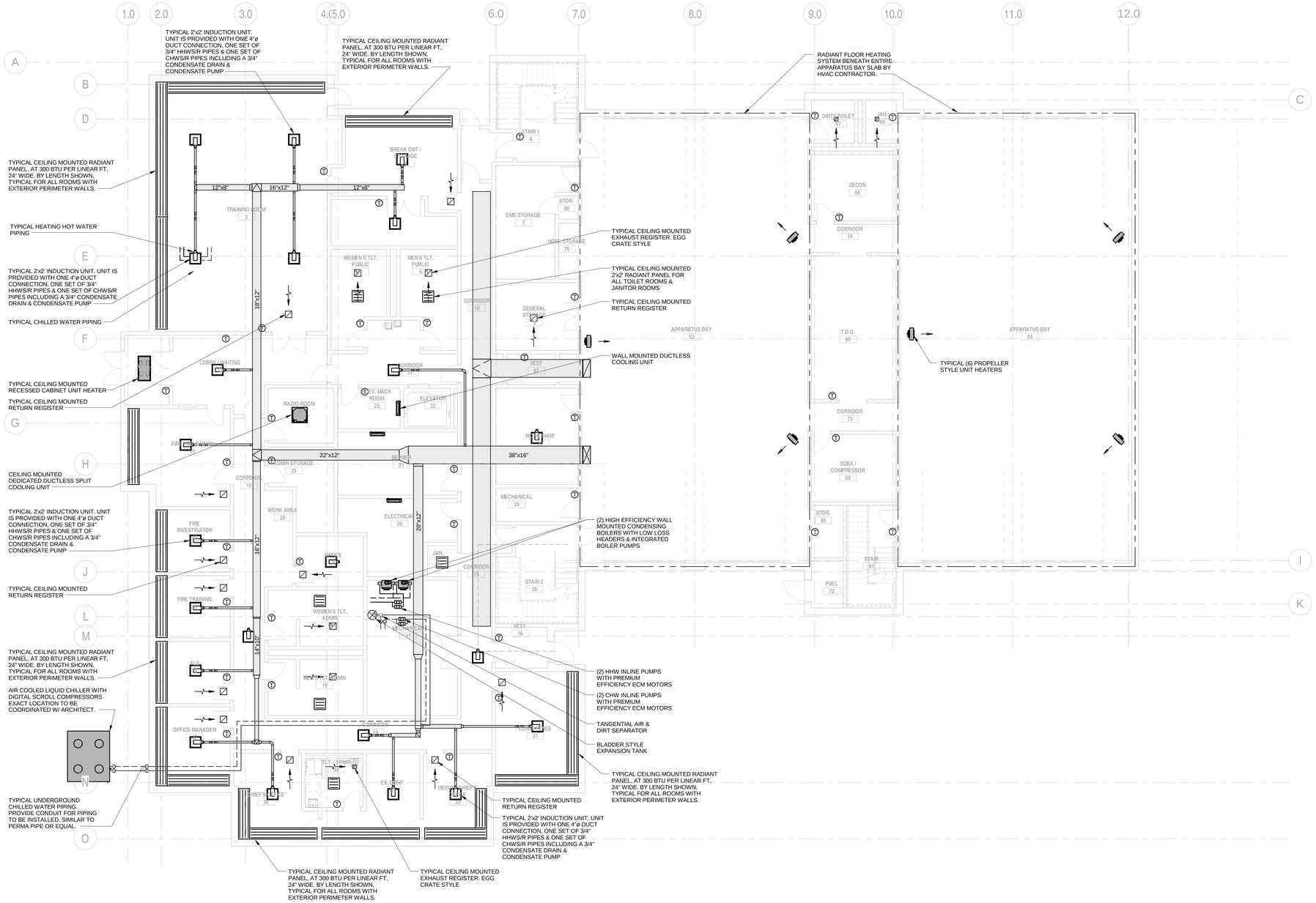

GARCIA GALUSKA DESOUSA
CONSULTING ENGINEERS
37 Stillwater Avenue, Augusta, ME 04330
AVC, INC.
02747 - 1001
E - MAIL info@g - g - d . com
508 - 998 - 2700 FAX 508 - 998 - 0883

ARCHITECTS • PROJECT MANAGERS
Burlington, VT 05401
T : 802 863 1455
F : 802 863 1458
Northampton, MA 01060
260 Meadow Street, Bldg 7
T : 413 586 0860
F : 978 499 3944
www.doreandwhitter.com
DORE & WHITTER ARCHITECTS, INC.

Project No. 14-690

WESTFORD FIRE STATION

65 Boston Road
Westford, MA 01886

COPYRIGHT © 2014 by Dore & Whitter Architects Inc. (D&W). These documents are D&W's instruments of service and as such D&W retains all copyrights, common law and statutory rights. Use of these documents without D&W's express, written permission will result in copyright infringement.

SCHEMATIC DESIGN

REVISION:	Date:

DATE: 11/21/2015	SCALE: 1/8" = 1'-0"
DRAWN BY: TRB	CHK'D BY: RN

SHEET TITLE: FIRST FLOOR PLAN - HVAC

SHEET #: **M101**

11/20/2015 4:59:40 PM C:\Users\Tyler_brown\Documents\MEP - 690 - WESTFORD FIRE STATION_tyler_brown.rvt

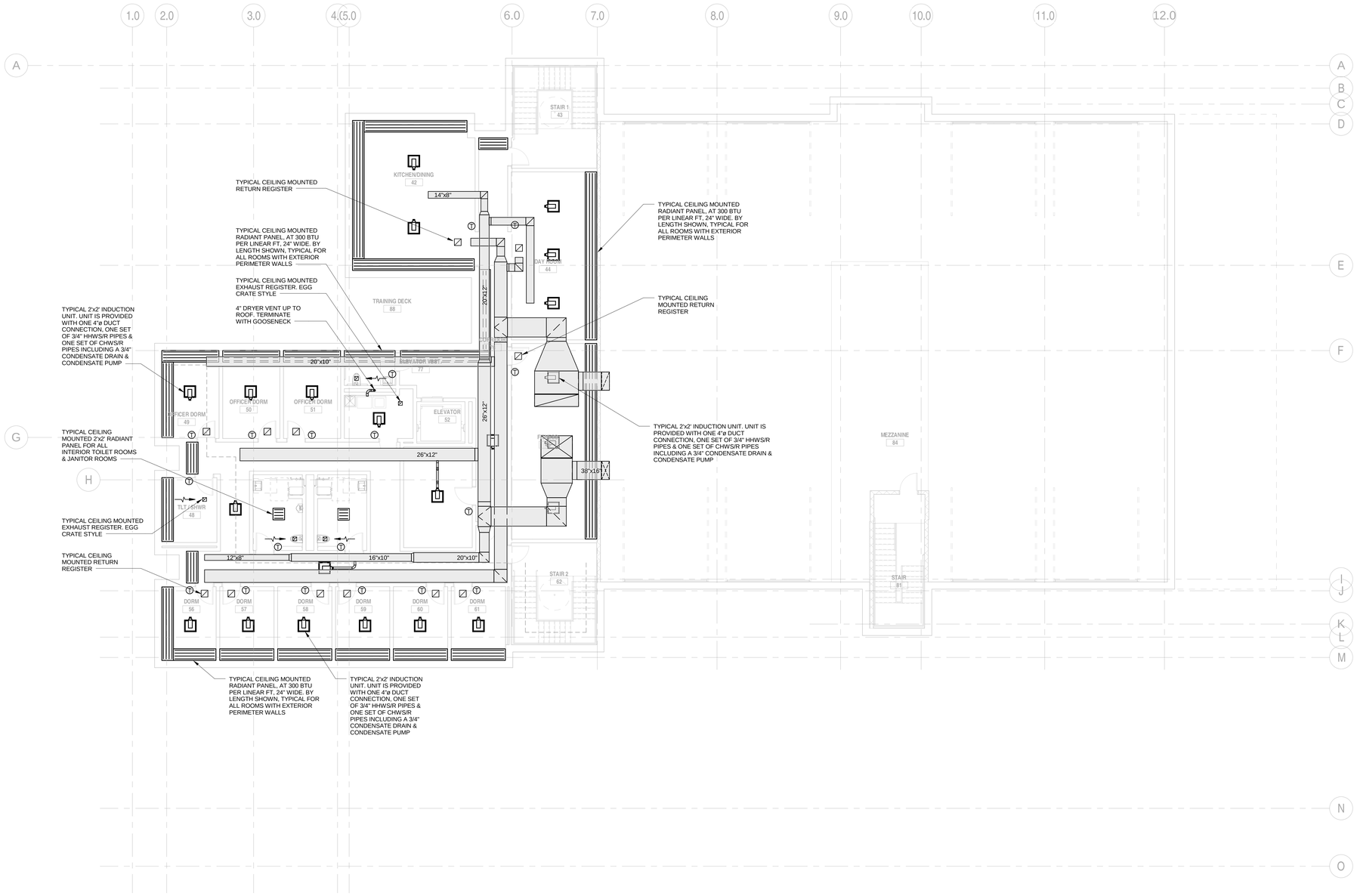

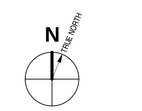

PROJECT NORTH

SCALE: 1/8"=1'-0" GRAPHIC SCALE 0 4' 8' 16'

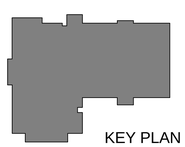

KEY PLAN

GARCIA GALUSKA DESOUSA
CONSULTING ENGINEERS
37 Stiles Road, Salem, NH 03079
508 - 998 - 2700 FAX 508 - 998 - 0883 E - MAIL info@g - g - d . com
AVC, INC.
02727 - 1421

ARCHITECTS • PROJECT MANAGERS
Brattleboro, VT 05401
2 - 4 Main Street
P : 802 . 863 . 1455
F : 802 . 863 . 1456
Northampton, MA 01060
260 Meadow Street, Bldg 7
P : 413 . 586 . 8860
F : 978 . 499 . 2944
www.doreandwhitter.com
DORE & WHITTER ARCHITECTS, INC.

Project No.
14-690

WESTFORD FIRE STATION

65 Boston Road
Westford, MA 01886

COPYRIGHT © 2014 by Dore & Whitter Architects Inc. (D&W)
These documents are D&W's instruments of service and as such D&W retains all copyrights, common law and statutory rights. Use of these documents without D&W's express, written permission will result in copyright infringement.

SCHEMATIC DESIGN

REVISION:	Date:

DATE: 11/21/2015	SCALE: 1/8" = 1'-0"
DRAWN BY: TRB	CHK'D BY: RN

SHEET TITLE:
SECOND FLOOR PLAN - HVAC

SHEET #:
M102

11/20/2015 4:59:41 PM C:\Users\Tyler_brown\Documents\MEP - 690 - WESTFORD FIRE STATION_tyler_brown.rvt

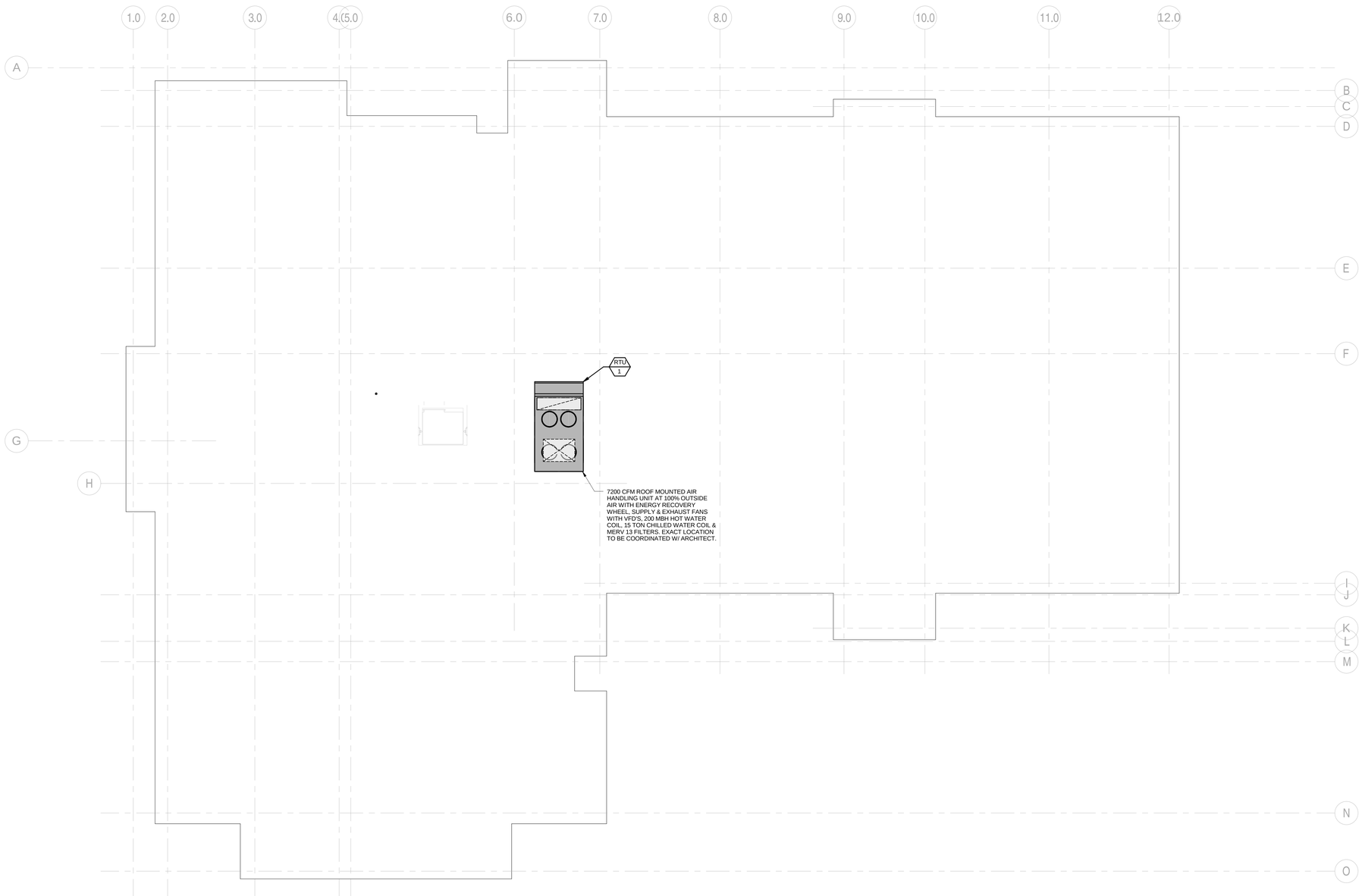

N
TRUE NORTH
PROJECT NORTH

0 4' 8' 16'
SCALE: 1/8"=1'-0" GRAPHIC SCALE

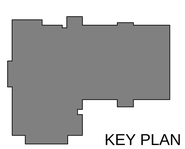

KEY PLAN

C:\Users\Tyler_brown\Documents\MEP - 690 - WESTFORD FIRE STATION_tyler_brown.rvt

11/20/2015 4:59:41 PM

GARCIA GALUSKA DESOUSA
CONSULTING ENGINEERS
375 Commercial Street Manchester, NH 03101
AVE. NYC.
02767 - 1521
508 - 998 - 2700 FAX 508 - 998 - 0883 E - MAIL info@g - g - d . com

ARCHITECTS • PROJECT MANAGERS
DORE & WHITTIER ARCHITECTS, INC.
Brattleboro, VT 05401
1 Main Street
P : 802 . 863 . 1455
F : 802 . 863 . 1456
Newburyport, MA 01950
260 Merrimac Street, Bldg 7
Newburyport, MA 01950
P : 978 . 499 . 2900
F : 978 . 499 . 2944
www.doreandwhittier.com

Project No.
14-690

WESTFORD FIRE STATION

65 Boston Road
Westford, MA 01886

COPYRIGHT © 2014 by Dore & Whitter Architects Inc. (D&W). These documents are D&W's instruments of service and as such D&W retains all copyrights, common law and statutory rights. Use of these documents without D&W's express, written permission will result in copyright infringement.

SCHEMATIC DESIGN

REVISION:	Date:

DATE: 11/21/2015	SCALE: 1/8" = 1'-0"
DRAWN BY: TRB	CHK'D BY: RN

SHEET TITLE:
ROOF PLAN - HVAC

SHEET #:
M103

SYMBOL LIST

LEGEND NOTES:

A. THIS SHEET IS A GENERAL LIST OF SYMBOLS AND ABBREVIATIONS AND SHALL BE USED AS A DICTIONARY TO DEFINE ITEMS INDICATED ON DRAWINGS. NOT ALL SYMBOLS OR ABBREVIATIONS ARE NECESSARILY USED ON THIS PROJECT. ALL EQUIPMENT IS TO BE PROVIDED UNDER THIS SECTION UNLESS SPECIFICALLY INDICATED OTHERWISE.

LIGHTING FIXTURES (see lighting fixture schedule)

Symbol	Description
A1 / 32b	FIXTURE KEYING SYSTEM A1 = FIXTURE TYPE; REFER TO PLANS FOR TYPES 32= CIRCUIT #; REFER TO PLANS FOR CIRCUIT NUMBERS b= SWITCH CONTROL; REFER TO PLANS FOR SWITCH CONTROL
	FLUORESCENT LIGHT FIXTURE, CEILING MOUNTED SURFACE, GRID MOUNTED SURFACE, PENDANT, OR RECESSED.
	LIGHT FIXTURE CIRCUITED TO NORMAL/EMERGENCY SOURCE AND/OR PROVIDED WITH EMERGENCY BATTERY PACK.
	SINGLE FACE INTERNALLY LIT EXIT SIGN, ARROWS AS INDICATED ON DRAWINGS.
	DOUBLE FACE INTERNALLY LIT EXIT SIGN, ARROWS AS INDICATED ON DRAWINGS.
	WALL MOUNTED FIXTURE.
IU	IN USE SIGN - REFER TO FIXTURE SCHEDULE
SL2 SL1	POLE MOUNTED LIGHT FIXTURE
SL6	SITE FLAG LIGHT FIXTURE
	SITE UTILITY POLE RISER

SWITCHES (typically mtd 48" AFF ℄ u.n.o)

Symbol	Description
S_a	SINGLE POLE SWITCH-"a" DESIGNATES SWITCH CONTROL (LOWER CASE).
S_2	TWO POLE SWITCH
S_3	THREE-WAY SWITCH.
S_P	SINGLE POLE SWITCH WITH PILOT LIGHT-GLOWS IN "OFF" POSITION WHEN IN VIEW OF LIGHTS. GLOWS IN "ON" POSITION WHEN REMOTE FROM LIGHTS.
S_4	FOUR-WAY SWITCH.
S_K	KEY OPERATED SWITCH.
S_{WP}	WEATHERPROOF SINGLE POLE SWITCH.
S_{DT}	SINGLE POLE/DOUBLE THROW SWITCH.
SM	THREE POSITION MOMENTARY CONTACT SWITCH-UP/DOWN/CENTER OFF.

LIGHTING CONTROLS

Symbol	Description
SSU	ALCS SYSTEM SERVER UNIT - REFER TO ALCS ONE-LINE DIAGRAM.
ECU	ALCS ENERGY CONTROL UNIT - REFER TO ALCS ONE-LINE DIAGRAM.
NES	ALCS NETWORK ETHERNET SWITCH - REFER TO ALCS ONE-LINE DIAGRAM.
L	ALCS LOCAL SWITCHING / DIMMING STATION - REFER TO ALCS RISER DIAGRAM
L V	ALCS VANDAL RESISTANT LOCAL SWITCHING STATION - REFER TO ALCS RISER DIAGRAM
M	ALCS MASTER SWITCHING / DIMMING STATION - REFER TO ALCS RISER DIAGRAM
MTS	ALCS MASTER TOUCH SCREEN - REFER TO ALCS ONE-LINE DIAGRAM.
LTS	ALCS LOCAL TOUCH SCREEN - REFER TO ALCS ONE-LINE DIAGRAM.
PC	ALCS EXTERIOR PHOTOCELL - REFER TO ALCS ONE-LINE DIAGRAM.
OS	ALCS CEILING OCCUPANCY SENSOR - REFER TO ALCS ONE-LINE DIAGRAM.
PS	ALCS CEILING PHOTO SENSOR - REFER TO ALCS ONE-LINE DIAGRAM.
OS	ALCS WALL OCCUPANCY SENSOR - REFER TO ALCS ONE-LINE DIAGRAM.
IO	ALCS INPUT/OUTPUT MODULE - REFER TO ALCS ONE-LINE DIAGRAM.
ER	EMERGENCY BY-PASS RELAY - REFER TO EMERGENCY SUPERVISORY BY-PASS RELAY DETAIL

FIRE ALARM SYSTEM

Symbol	Description
F	MANUAL PULL STATION - MTD 48" AFF TO ℄. (*) INDICATES STOPPER II COVER.
F	SPEAKER/VISUAL "ADA" COMPLIANT SIGNAL - MTD 80" AFF TO ℄. COLOR SHALL BE WHITE.
F	VISUAL "ADA" COMPLIANT SIGNAL - MTD 80" AFF TO ℄. COLOR SHALL BE WHITE.
CLG F	SPEAKER/VISUAL "ADA" COMPLIANT SIGNAL - CEILING MTD. COLOR SHALL BE WHITE.
S	CEILING MOUNTED PHOTOELECTRIC SMOKE DETECTOR.
S_E	SMOKE DETECTOR ALSO USED FOR ELEVATOR RECALL.
S_{SC}	SELF-CONTAINED 120 VOLT SMOKE DETECTOR.
S_L	SYSTEM SMOKE DETECTOR WITH LOCAL SOUNDER BASE.
S_D	DUCT TYPE SMOKE DETECTOR WITH SAMPLING TUBE. FURNISHED BY EC, INSTALLED BY HVAC, WIRED BY EC.
$S_{D/FSD}$	DUCT TYPE SMOKE DETECTOR WITH SAMPLING TUBE FOR CONTROL OF ASSOCIATED FSD AND UNIT SHUTDOWN FURNISHED BY EC, INSTALLED BY HVAC, WIRED BY EC.
F H 135°	THERMAL DETECTOR - 135° F FIXED TEMPERATURE AND RATE OF RISE. "F" INDICATES FIXED TEMPERATURE ONLY.
H 200°	THERMAL DETECTOR - 200° F FIXED TEMPERATURE.
	REMOTE ALARM INDICATOR-LABEL.
RT	KEY OPERATED REMOTE TEST STATION WITH LED-LABEL.
FS	SPRINKLER FLOW SWITCH - F&I BY F.P.C. WIRED BY E.C.
TS	SPRINKLER TAMPER SWITCH - F&I BY F.P.C. WIRED BY E.C.
PS	SPRINKLER PRESSURE SWITCH - F&I BY F.P.C. WIRED BY E.C.
LPS	SPRINKLER LOW PRESSURE SWITCH - F&I BY F.P.C. WIRED BY E.C.
FSD	FIRE SMOKE DAMPER - F&I BY HVAC CONTRACTOR, WIRED BY A.T.C. CONTROL MODULE WIRED BY ELECTRICAL CONTRACTOR.
DH	MAGNETIC DOOR HOLDER - MTD 80" AFF TO ℄.
FACP	FIRE ALARM CONTROL PANEL. (VOICE EVACUATION PANEL)
ANN	FIRE ALARM ANNUNCIATOR.
R	RED FIRE ALARM BEACON-WEATHERPROOF.
W	WHITE FIRE ALARM BEACON-WEATHERPROOF.
E	ELECTRIC BELL
MM	MONITOR MODULE
CM	CONTROL MODULE
IM	ISOLATION MODULE
K	KEY REPOSITORY BOX (KNOX BOX)
FATC	FIRE ALARM TERMINAL CABINET
PIV	POST INDICATOR VALVE-F&I BY FPC, WIRED BY EC.
CO	WALL MOUNTED CARBON MONOXIDE DETECTOR, MOUNTING HEIGHT PER MANUFACTURERS RECOMMENDATION, EQUAL TO SYSTEM SENSOR MODEL No. CO1224T . PROVIDE ONE MONITOR MODULE PER SENSOR.
M	RADIO MASTER BOX

TECHNOLOGY

Symbol	Description
W V	VOICE OUTLET - AT 18" A.F.F., UNO - SINGLE GANG OPENING WITH SINGLE GANG PLASTER RING AND PULL LINE TO NEAREST ACCESSIBLE CEILING SPACE. MOUNTING DESIGNATIONS: "C" = ABOVE COUNTER, "W" = WALL PHONE AT 48" A.F.F., "V" = VERIZON LINE 18" A.F.F.. WIRING AND JACKS BY I.T. SUBCONTRACTOR
T	TEXAS INMATE PHONE OUTLET - AT 48" A.F.F., UNO - SINGLE GANG OPENING AND 4"SQ. X 2 1/2"DP J.B. WITH 1"C. WITH PULL LINE TO NEAREST ACCESSIBLE CEILING SPACE. BLANK STAINLESS STEEL FACE PLATE BY E.C. WIRING AND JACKS BY OWNER.
#V/#D	VOICE/DATA OUTLET - AT 18" A.F.F., UNO - SINGLE GANG OPENING WITH SINGLE GANG PLASTER RING AND PULL LINE TO NEAREST ACCESSIBLE CEILING SPACE. MOUNTING DESIGNATIONS: "C"=ABOVE COUNTER. WIRING AND JACKS BY I.T. SUBCONTRACTOR.
#	DATA OUTLET - AT 18" A.F.F. UNO-SINGLE GANG OPENING WITH SINGLE GANG PLASTER RING AND PULL LINE TO NEAREST ACCESSIBLE CEILING SPACE. MOUNTING DESIGNATIONS: "C"=ABOVE COUNTER, "AN"=WIRELESS ACCESS POINT MTD. AT 84"A.F.F. "ANF" = WIRELESS ACCESS POINT MTD ABOVE CEILING UNO. JACKS AND WIRING BY I.T. SUBCONTRACTOR.
	DATA OUTLET FLUSH FLOOR MOUNTED - PROVIDE FLOOR BOX WITH SINGLE GANG OPENING WITH 1"C. WITH PULL LINE TO NEAREST ACCESSIBLE CEILING OF SAME FLOOR. WIRING AND JACKS BY I.T. SUBCONTRACTOR.
84" 84" TVC	VIDEO OUTLET & (2) 20AMP 120VOLT DUPLEX RECEPTACLE OUTLET PROVIDE WIREMOLD SERIES EFSB4 WALL BOX MODEL# EFSB4 OR EQUAL- AT 72"A.F.F., UNO-WITH (1)1"C. FOR DATA AND (1)2"C FOR FUTURE A/V WIRING WITH PULL LINE TO NEAREST ACCESSIBLE CEILING SPACE. DATA WIRING AND JACK BY I.T. SUBCONTRACTOR. SEE DETAIL 4/E3.02
60" 60" TVE	VIDEO OUTLET & (2) 20AMP 120VOLT DUPLEX RECEPTACLE OUTLET PROVIDE WIREMOLD SERIES EFSB4 WALL BOX MODEL# EFSB4 OR EQUAL- AT 54"A.F.F., UNO-WITH (1)1"C. FOR DATA AND (1)2"C FOR FUTURE A/V WIRING WITH PULL LINE TO NEAREST ACCESSIBLE CEILING SPACE. DATA WIRING AND JACK BY I.T. SUBCONTRACTOR. SEE DETAIL 4/E3.02
LCD	VIDEO OUTLET - AT 18" A.F.F. UNO - SINGLE GANG OPENING WITH SINGLE GANG PLASTER RING AND PULL LINE TO NEAREST ACCESSIBLE CEILING SPACE. WIRING AND JACKS BY I.T. SUBCONTRACTOR.
T	VOICE/DATA OUTLET - AT 18" A.F.F., UNO - (1)DOUBLE GANG OPENING AND (1) 4"SQ.X4"DEEP J.B. WITH (2) 1"C. WITH PULL LINE TO NEAREST ACCESSIBLE CEILING SPACE. (2) SINGLE GANG OPENINGS AND (2) 4"SQ. X 2 1/2"DP J.B. WITH (2) 1"C. WITH PULL LINE TO NEAREST ACCESSIBLE CEILING SPACE. WIRING AND JACKS BY I.T. SUBCONTRACTOR.

POWER

Symbol	Description
	120/208 VOLT, 3 PHASE, 4 WIRE PANELBOARD.
	120/208 VOLT, 3 PHASE, 4 WIRE NORMAL/EMERGENCY SYSTEM PANELBOARD.
	PANELBOARD FLUSH MOUNTED.
E	ELECTRIC MANHOLE
T	TELEPHONE MANHOLE
C	CATV MANHOLE
M	METER SOCKET
J J	JUNCTION BOX - SIZE AS REQUIRED.
DW J	JUNCTION BOX - WITH FLEXIBLE CONNECTION TO EQUIPMENT-"DW" DENOTES DISHWASHER, "H" HOOD, "WO" WALL OVEN, "D" DISPOSER, "HD" HAND DRYER.
3R	FUSED DISCONNECT SWITCH HEAVY DUTY TYPE-"3R" INDICATES NEMA 3R 20 ← INDICATES TIME DELAY FUSE SIZE. 30 ← INDICATES SAFETY SWITCH SIZE
3R	UNFUSED DISCONNECT SWITCH HEAVY DUTY TYPE-"3R" INDICATES NEMA 3R
TS	HORSEPOWER RATED THERMAL SWITCH WITH PILOT LIGHT
VFD	VARIABLE FREQUENCY DRIVE.
C	MULTIPOLE CONTACTOR IN NEMA I ENCLOSURE-RATINGS AND NUMBER OF POLES AS RQUIRED.
CP	EQUIPMENT CONTROL PANEL.
ATS	AUTOMATIC TRANSFER SWITCH.
HOA	HAND-OFF-AUTOMATIC SELECTOR SWITCH.
●●●	THREE FUNCTION PUSHBUTTON SWITCH (UP/DOWN/STOP)-FURNISHED BY EQUIPMENT SUPPLIER, INST. & WIRED BY EC.
●●	ON/OFF PUSHBUTTON SWITCH.
70AT/100AF CB	ENCLOSED CIRCUIT BREAKER-"70AT" INDICATES 70 AMP TRIP; "100AF" INDICATES 100 AMP FRAME.
PB	PULL BOX-SIZE AS REQUIRED.
G	GENERATOR.

RECEPTACLES (typically mtd. at 18" a.f.f., uno)

TYPICAL OUTLET NOTATIONS

Notation	Description
"a"	= SWITCHED OUTLET, "a" - INDICATES SWITCH CONTROL.
"C"	= MOUNTED 8" ABOVE COUNTER OR 42" AFF. COORDINATE EXACT MOUNTING HEIGHT WITH ARCHITECTURAL DRAWINGS.
"CP"	= CONNECTED TO COPS PANEL
"F"	= FURNITURE MTD, COORDINATE EXACT LOCATION WITH FURNITURE PLANS.
"GFC"	= GROUND FAULT INTERRUPTER TYPE MOUNTED AT 42" AFF.
"GFI"	= GROUND FAULT INTERRUPTER TYPE.
"H"	= HORIZONTALLY MOUNTED.
"IG"	= ISOLATED GROUND RECEPTACLE WITH SEPARATE GREEN GROUND CONDUCTOR WITH YELLLOW STRIPE TO ISOLATED GROUND BUS IN PANEL.
"M"	= MODULAR FURNITURE SERVICE - PROVIDE FLEXIBLE CONNECTION, COORDINATE EXACT LOCATION WITH FURNITURE PLANS.
"SP"	= SURGE PROTECTION RECEPTACLE
"T"	= TAMPER RESISTANT SAFETY RECEPTACLE.
"TL"	= TWIST LOCK TYPE.
"WP"	= WEATHERPROOF RECEPTACLE WITH "NRTL" LISTED COVERPLATE FOR WET LOCATION WITH GFI TYPE RECEPTACLE INSTALLED IN NEMA 4 ENCLOSURE W/KEY LOCK.
"CD"	= CABLE DROP RECEPTACLE- REFER TO CABLE DROP DETAIL.
"P"	= PEDESTAL MOUNTED ON CASEWORK WITH GFI RECEPTACLE. COORDINATE WITH EQUIPMENT DRAWINGS FOR EXACT LOCATION.
"E"	= RECEPTACLE CONNECTED TO NORMAL/EMERGENCY CIRCUIT.
"CP"	= RECEPTACLE CONNECTED TO COP PANEL CIRCUIT.

Symbol	Description
	20AMP, 120 VOLT SINGLE RECEPTACLE
2	20 AMP, 120 VOLT DUPLEX RECEPTACLE; "2" INDICATES CIRCUIT NUMBER.
	20AMP, 120 VOLT DOUBLE DUPLEX RECEPTACLE.
	SPECIAL PURPOSE OUTLET - RATING AS INDICATED ON DRAWINGS. EXAMPLE; ELECTRIC DRYER= 30A, 125/250V, 3 POLE, 4 WIRE, NEMA 14-30R ELECTRIC RANGE= 50A, 125/250V, 3 POLE, 4 WIRE, NEMA 14-50R
	20 AMP, 120 VOLT DUPLEX RECEPTACLE FLUSH FLOOR MOUNTED WITH COVER.
	20 AMP, 120 VOLT DOUBLE DUPLEX RECEPTACLE FLUSH FLOOR MOUNTED WITH COVER.
EWC	ELECTRIC WATER COOLER OUTLET - 20 AMP, 120 VOLT. GROUND FAULT INTERRUPTER TYPE
	20AMP, 120VOLT DUPLEX RECEPTACLE CONNECTED TO NORMAL/ EMERGENCY CIRCUIT.
	20AMP, 120VOLT DOUBLE DUPLEX RECEPTACLE CONNECTED TO NORMAL/ EMERGENCY CIRCUIT.
	NEMA TYPE L5 -20R ELECTRICAL RECEPTACLE WITH DEDICATED 20 AMP CIRCUIT. MOUNTED ABOVE EQUIPMENT RACK ON UNDERSIDE OF CABLE TRAY.
CR #	CORD REEL REFER TO CORD REEL SCHEDULE ON FLOOR PLANS FOR REQUIREMENTS.
	SURFACE RACEWAY WITH BASE, COVER, AND DIVIDER "B,C&D". IVORY FINISH. PROVIDE FIBER READY 2" RADIUS FITTINGS. SOLID END INDICATES RISE TO ABOVE ACCESSIBLE CEILING SPACE WITH B,C&D.
	20 AMP, 120 VOLT GFI, HORIZONTALLY MOUNTED ON FURNITURE DUPLEX RECEPTACLE INTENDED FOR COMPUTER USE. COLOR OF OUTLET TO BE SELECTED BY OWNER.
	20 AMP, 120 VOLT DUPLEX RECEPTACLE INTENDED FOR COMPUTER USE. COLOR OF OUTLET TO BE SELECTED BY OWNER.
	20AMP, 120VOLT DOUBLE DUPLEX RECEPTACLE INTENDED FOR COMPUTER USE. COLOR OF OUTLET TO BE SELECTED BY OWNER.
	TWO DUPLEX RECEPTACLES, MOUNTED AT 18" AFF AND 84" AFF.
4 / 2	RECESSED FLOOR BOX WITH (2) 20A, 120V DUPLEX RECEPTACLES AND PROVISIONS FOR (4) RJ45 JACKS EQUAL TO WIREMOLD SERIES #RFB4-FPCTCBS (CARPET), FPBTCBS (WOOD FLOOR) AND COMMUNICATION BRACKET FOR TEL/DATA DEVICES. PROVIDE 1"C FOR TEL/DATA TO NEAREST ACCESSIBLE CEILING SPACE.
T	RECESSED FLOOR BOX WITH (2) 20A, 120V DUPLEX RECEPTACLES AND PROVISIONS FOR (4) RJ45 JACKS EQUAL TO WIREMOLD SERIES #RFB6-FPCTCBS (CARPET), FPBTCBS (WOOD FLOOR) AND COMMUNICATION BRACKET FOR TEL/DATA DEVICES. PROVIDE (1)1"C FOR TEL/DATA AND (3) 1 1/4" FOR A/V WIRING TO NEAREST ACCESSIBLE CEILING SPACE.
SRP	SMART RESCUE PHONE. CUSTOM BACK BOX FURNISHED AND INSTALL BY E.C. 1" CONDUIT W/PULL STRING TO NEAREST ACCESSIBLE CEILING SPACE BY E.C.. DEVICE AND WIRING BY E.C.
ARA	AREA OF RESCUE ASSISTANCE BUTTON. CUSTOM BACK BOX FURNISHED AND INSTALL BY E.C. 1" CONDUIT W/PULL STRING TO NEAREST ACCESSIBLE CEILING SPACE BY E.C.. DEVICE AND WIRING BY E.C.

WIRE AND RACEWAYS

Symbol	Description
	WIRING AND RACEWAY - NO. OF DIAGONAL LINES INDICATES NO. #12 AWG CONDUCTORS. ABSENCE OF DIAGONAL LINES INDICATES 2 #12 AWG+#12AWG GROUND UNLESS NOTED OTHERWISE. GROUND WIRE IS NOT SHOWN IN COUNT BUT SHALL BE PROVIDED.
	HOMERUN TO PANEL - NO. OF ARROWS INDICATES NO. OF 20 AMP/1 POLE CIRCUITS TO PANEL - UNLESS NOTED OTHERWISE.
NE	NORMAL/EMERGENCY WIRING - MIN. 2#10 AWG + #10 AWG GROUND. RUN IN SEPARATE RACEWAY.
4F	FIRE ALARM WIRING - "4F" INDICATES 4 #14 THHN SOLID IN 3/4" MIN. SIZE CONDUIT.
E	EMERGENCY ONLY WIRING-MINIMUM 2#10 AWG IN SEPARATE RACEWAY.
P	UNDERGROUND PRIMARY ELECTRIC SERVICE
SE	UNDERGROUND SECONDARY ELECTRIC SERVICE
T	UNDERGROUND TELEPHONE SERVICE
CTV	UNDERGROUND CABLE TV SERVICE
	4" CONDUIT SLEEVE THRU-WAY, ACROSS CORRIDOR OR BETWEEN ROOMS FOR TEL/DATA - LOCATE ABOVE CEILING.
	1" CONDUIT SLEEVE THRU-WAY, ACROSS CORRIDOR OR BETWEEN ROOMS FOR TEL/DATA - LOCATE ABOVE CEILING.
	CONDUIT SLEEVE EXTENDED TO NEAREST ACCESSIBLE CEILING- TERMINATE WITH INSULATED BUSHING.
	FLEXIBLE CONNECTION TO EQUIPMENT
	CABLE TRAY-CONCEALED ABOVE CEILING IN FINISHED AREAS. PROVIDE LATERAL SUPPORT AS REQUIRED.

MISCELLANEOUS-DEVICES

Symbol	Description
EPO	EMERGENCY POWER SHUNT TRIP - RED MUSHROOM HEAD WITH EXTENDED GUARD WITH EMERGENCY OFF LEGEND. MOUNT AT 48"AFF., U.O.I. PROVIDE NAMEPLATE INDICATING LOAD CONTROLLED "B" - INDICATES BREAK GLASS STATION WITH HAMMER SUPPORT CLIP AND FIVE REPLACEMENT DISCS STORED INSIDE BOX SUPPORTING DEVICE.
	HANDICAP DOOR ACTIVATE SWITCH-FURN. & INST. BY SYSTEM SUPPLIER. PROVIDE 4"SQ X 2 1/2"DP JB AND 1"C WITH PULL LINE TO ELECTRIC DOOR OPERATOR.
SV	SOLENOID VALVE - F&I BY P.C., WIRED BY E.C.
FT	FLUSH VALVE TRANSFORMER / POWER SUPPLY (120V/24V). FURNISHED BY P.C., INSTALLED & WIRED BY E.C.
TPD	TEMPERATURE SENSOR - CONNECT TO SECURITY SYSTEM.
LS	LIMIT SWITCH.
B	DOOR BELL-COORDINATE MH WITH ARCHITECT.
	LOW VOLTAGE PUSHBUTTON.
1 / E-3	DETAIL IDENTIFIER-INDICATES DETAIL #1 ON DWG. E-3.
	GROUND BAR 24W" X 1/8" THICK X 18" LONG COPPER BUS, U.N.O.
2 / E-3, A A	SECTION IDENTIFIER- INDICATES SECTION A-A, DETAIL #2 ON DWG. E-3.
K2	EQUIPMENT TAG NUMBER, REFER TO EQUIPMENT SCHEDULE, "K" INDICATES KITCHEN "C" INDICATES COMPUTER.
1	NOTE SYMBOL, "1" INDICATES TO REFER TO NOTE #1
3	CIRCUIT SIZE NUMBER, REFER TO "CIRCUIT SIZE SCHEDULE".
ADA CS	ADA "CALL STATION", HANDS FREE. MOUNT AT 48"AFF.
ADA MCS	ADA "MASTER CALL STATION", HANDS FREE. MOUNT AT 48"AFF.
P	EMERGENCY CALL STATION - LOCATE WITHIN 3' OF WATER CLOSET WITH PULL CORD EXTENDING TO WITHIN 12" OF THE FLOOR.
AV	AUDIO/VISUAL SIGNAL FOR SINGLE TOILETS. MOUNT OVER DOOR.
E	ELECTRIC DOOR-OPERATOR. FURN. & INST. BY GC, WIRED BY EC.
LS	LIMIT SWITCH WIRED BY E.C.
MS	MICRO SWITCH PHOTO-EYE DOOR CONTROLLER FURNISHED BY DOOR CONTRACTOR, INSTALLED & WIRED BY E.C.
G	TRAFFIC LIGHT FURNISHED BY OVERHEAD DOOR SUPPLIER, INSTALLED & WIRED BY E.C.
SPD	SURGE PROTECTION DEVICE
R	TRAFFIC LIGHT FURNISHED BY OVERHEAD DOOR SUPPLIER, INSTALLED & WIRED BY E.C.
T	REVERSE ACTING THERMOSTAT , INSTALLED & WIRED BY ATC CONTRACTOR
C	CLOCK , FURNISHED BY OTHERS, WIRED BY ELECTRICAL CONTRACTOR

MECHANICAL EQUIPMENT

(REFER TO MECHANICAL EQUIPMENT SCHEDULE)

Symbol	Description
BB	ELECTRIC BASEBOARD-FURNISHED BY HVAC, INSTALLED AND WIRED BY EC.
CH	CABINET HEATER - F & I BY HVAC, WIRED BY E.C.
UH	UNIT HEATER - F & I BY HVAC, WIRED BY E.C.
EF	EXHAUST FAN - F & I BY HVAC, WIRED BY E.C.
C.O. J	CONNECTION TO CARBON MONOXIDE MONITOR MIN. 3#14 AWG. PER MONITOR.
TB	TERMINAL BOX-F&I BY HVAC WIRED BY E.C.
FS D	MOTORIZED FIRE/SMOKE DAMPER-F&I BY HVAC, WIRED BY E.C. TO POWER & FIRE ALARM SYSTEM.
2	MOTOR - NUMERAL INDICATES HORSEPOWER

ZETRON SYSTEM

Symbol	Description
ZS	ZETRON CEILING MOUNTED SPEAKER. BACKBOX FURNISH BY OWNER'S ZETRON INSTALLER, INSTALLED BY E.C.WIRING AND SPEAKER BY OWNER'S ZETRON INSTALLER.
ZS	ZETRON SOUND SPHERE SPEAKER BY OWNER'S ZETRON. DOUBLE GANG OPENINGS AND 4"SQ. X 2 1/2"DP J.B. WITH 1"C. WITH PULL LINE TO WATCH ROOM.
ZS	ZETRON WALL MOUNTED SPEAKER BY OWNER'S ZETRON. SINGLE GANG OPENINGS AND 4"SQ. X 2 1/2"DP J.B. WITH 1"C. WITH PULL LINE TO NEAREST ACCESSIBLE CEILING SPACE.
ZV	ZETRON VOLUME CONTROL. SINGLE GANG FACE PLATE AND 4"SQ.X2 1/2"DPJ.B. MOUNTING HEIGHT AT 48" A.F.F. WITH 1"C WITH PULL LINE TO NEAREST ACCESSIBLE CEILING SPACE. WIRING AND JACKS BY OWNER'S ZETRON INSTALLER.
ZA	ZETRON ACKNOWLEDGE BUTTON. SINGLE GANG FACE PLATE AND 4"SQ.X2 1/2"DPJ.B. MOUNTING HEIGHT AT 48" A.F.F. WIRING AND JACKS BY OWNER'S ZETRON INSTALLER.
ZM	ZETRON REMOTE MIRCOPHONE. SINGLE GANG FACE PLATE AND 4"SQ.X2 1/2"DPJ.B. MOUNTING HEIGHT AT 48" A.F.F. WIRING AND JACKS BY OWNER'S ZETRON INSTALLER.
Z26	ZETRON MODEL Z26 FURNISHED AND INSTALLED BY OWNER'S ZETRON VENDOR. PROVIDE 3/4"C FROM Z26 TO LIGHTING CONTACTOR IN ELECTRIC ROOM. PROVIDE 3/4"C FROM Z26 TO EACH APPARATUS BAY DOOR OPEN BUTTONS. PROVIDE A 12"X12"X6" JUNCTION BOX LOCATED ABOVE Z26. PROVIDE A 3/4" CONDUIT FROM EACH HANDICAP DOOR OPERATOR TO Z26 AND PROVIDE 3/4" CONDUIT FROM Z26 TO Z26 IN DISPATCH. COORDINATE WITH OWNER'S ZETRON INSTALLER.
VR5	VISION - 21 REMOTE DISPLAY SCREEN PROVIDED BY OWNER. PROVIDE 120 VOLT RECEPTACLE. LOCATE AS REQUIRED. PROVIDE 4" SQUARE X 2 1/2" DP JUNCTION BOX WITH 1"C TO V21 .
V21	VISION - 21 PROVIDED BY OWNER. PROVIDE 120 VOLT RECEPTACLE. LOCATE AS REQUIRED. PROVIDE 4" SQUARE X 2 1/2" DP JUNCTION BOX WITH 1"C TO VR5. PROVIDE 3/4"C TO ROOF WITH WEATHERHEAD FOR VISION - 21 ANTENNA CABLE. ANTENNA CABLE BY OWNER.
Z6	ZETRON MODEL Z6 BY OWNERS ZETRON VENDOR.

ABBREVIATIONS

A	AMPERE
AL	ALUMINUM
AF	AMP, FRAME
AFF	ABOVE FINISHED FLOOR
AFG	ABOVE FINISHED GRADE
AIC	INTERRUPTING CAPACITY
ALCS	AUTOMATED LIGHTING CONTROL SYSTEM
ARCH	ARCHITECT
AT	AMP TRIP
ATC	AUTO-TEMP CONTROL CONTRACTOR
ATS	AUTOMATIC TRANSFER SWITCH
AWG	AMERICAN WIRE GAUGE
C	CONDUIT (GENERIC TERM FOR RACEWAY, PROVIDE AS SPECIFIED)
CATV	CABLE TELEVISION
CB	CIRCUIT BREAKER
CKT	CIRCUIT
COP	CRITICAL OPERATION SYSTEM
CLG	CEILING
CU	COPPER
℄	CENTERLINE
DEP	DEPARTMENT OF ENVIRONMENTAL PROTECTION
DP	DEEP
EPA	ENVIRONMENTAL PROTECTION AGENCY
DWG	DRAWING
EC	ELECTRICAL CONTRACTOR
EWC	ELECTRIC WATER COOLER
EMT	ELECTRIC METALLIC TUBING
FA	FIRE ALARM
FPC	FIRE PROTECTION SYSTEM CONTRACTOR
F&I	FURNISHED AND INSTALLED
G,GND	GROUND
GC	GENERAL CONDITIONS
GFI	GROUND FAULT INTERRUPTER
HVAC	HEATING, VENTILATING, AND AIR CONDITIONING CONTRACTOR
HP	HORSEPOWER
IG	ISOLATED GROUND
IMC	INTERMEDIATE METALLIC CONDUIT
IT	INFORMATION TECHNOLOGY CONTRACTOR
JB	JUNCTION BOX
KCMIL	THOUSAND CIRCULAR MILS
KES	KITCHEN EQUIPMENT SUPPLIER
KVA	KILO-VOLT AMPERE
KW	KILO-WATT
LTG	LIGHTING
MAAB	MASS ARCHITECTURAL ACCESS BOARD
MC	METAL CLAD CABLE
MCB	MAIN CIRCUIT BREAKER
MCC	MOTOR CONTROL CENTER
MDP	MAIN DISTRIBUTION PANEL
MH	MOUNTING HEIGHT
MI	MINERAL-INSULATED METAL SHEATHED CABLE
MLO	MAIN LUGS ONLY
MTD	MOUNTED
MTG	MOUNTING
MTS	MANUAL TRANSFER SWITCH
NIC	NOT IN CONTRACT
NO,#	NUMBER
NTS	NOT TO SCALE
P	POLE(S)
PB	PULL BOX
PC	PLUMBING CONTRACTOR
PH,φ	PHASE
PVC	POLY-VINYL CHLORIDE CONDUIT
PWR	POWER
REF	REFRIGERATOR
RSC	RIGID STEEL CONDUIT
SN	SOLID NEUTRAL
SWBD	SWITCHBOARD
TEL/DATA	TELEPHONE/DATA
TYP	TYPICAL
UNO	UNLESS NOTED OTHERWISE
WG	WIRE GUARD
WP	WEATHERPROOF
XFMR	TRANSFORMER
XP	EXPLOSION PROOF
@72"	MOUNT 72 INCHES TO CENTERLINE ABOVE FINISHED FLOOR OR GRADE

ONE LINE POWER

Symbol	Description
	LOAD-BREAK SWITCH.
	CIRCUIT BREAKER.
	CURRENT TRANSFORMER
	POTENTIAL TRANSFORMER.
LA	LIGHTNING ARRESTER AND GROUNDING TO PROTECT ALL PHASES.
	CONTACT, NORMALLY OPEN (NO).
	CONTACT, NORMALLY CLOSED (NC).
ST	SHUNT TRIP COIL.
CM	CUSTOMER METERING, ELECTRONIC SOLID STATE, UNLESS OTHERWISE INDICATED.
	POWER TRANSFORMER.
	FUSE, SIZE AS INDICATED.
GF	GROUND FAULT SENSOR & RELAY.
400A / 300A	SWITCH AND FUSE "400A" - INDICATES AMPERE SWITCH SIZE. "300A" - INDICATES AMPERE FUSE SIZE.
	SYSTEM GROUND OR EQUIPMENT GROUND.
N E L	AUTOMATIC TRANSFER SWITCH.

GARCIA GALUSKA DESOUSA
CONSULTING ENGINEERS INC.

DORE & WHITTIER ARCHITECTS, INC.
ARCHITECTS • PROJECT MANAGERS

Project No. 14-690

WESTFORD FIRE STATION
65 Boston Road
Westford, MA 01886

COPYRIGHT © 2014 by Dore & Whittier Architects Inc. (D&W)

SCHEMATIC DESIGN

REVISION:	Date:

DATE: 11/21/2015 SCALE:

DRAWN BY: MLP CHK'D BY: DMP

SHEET TITLE: ELECTRICAL SYMBOL LIST

SHEET #: E001

LIGHTING FIXTURE SCHEDULE (1) (5)

REF.	TYPE	MANUFACTURER	MODEL / SERIES	MTG.	VOLTAGE	LIGHT SOURCE NO.	LIGHT SOURCE WATTS	LIGHT SOURCE TYPE	DESCRIPTION
A	EL	CGF DESIGN	E74-OP-LED-80-CT3-UNV-WHT	S	UNIVERSAL	N/A	80	LED/3500K	4' LINEAR UTILITY FIXTURE WITH FROSTED ACRYLIC DIFFUSER
C	J	INDATECH	VCLW	W	UNIVERSAL	N/A	19	LED/4000K	UTILITY FIXTURE WITH GLASS GLOBE AND CAST GUARD
D	LP8	LEDALITE	7406LBCQG0811EW AC48	P	UNIVERSAL	N/A	64	LED/3500K	8' LINEAR DIRECT/INDIRECT FIXTURE WITH FROSTED ACRYLIC DIFFUSER
D	LR22	DAYBRITE	2CAG34L835-2-DS-UNV-DIM	R	UNIVERSAL	N/A	37	LED/3500K	2'X2' FIXTURE WITH FROSTED ACRYLIC DIFFUSER
D	LR24	DAYBRITE	2CAG42L835-4-DS-UNV-DIM	R	UNIVERSAL	N/A	40	LED/3500K	2'X4' FIXTURE WITH FROSTED ACRYLIC DIFFUSER
F	LS4	DAYBRITE	LF4FR3935ULAG-LF4WGW	S	UNIVERSAL	N/A	40	LED/3500K	4' UTILITY FIXTURE WITH FROSTED ACRYLIC DIFFUSER
F	LS8	DAYBRITE	LF8FR4135ULAG-LF4WGWX2	S	UNIVERSAL	N/A	80	LED/3500K	8' UTILITY FIXTURE WITH FROSTED ACRYLIC DIFFUSER
F	LSW8	DAYBRITE	DWAE70L8358UNV-EBK-FKR-126	S	UNIVERSAL	N/A	130	LED/3500K	8' UTILITY FIXTURE WITH WET LOCATION ACRYLIC DIFFUSER
H	LW2	DAY-O-LITE	PTPL-33-D-DP-SO-2-WM-W-U-DIM10	W	UNIVERSAL	N/A	19	LED/3500K	2' VANITY FIXTURE WITH FROSTED ACRYLIC DIFFUSER
H	LW4	DAYBRITE	CSW482835UDZTZO	W	UNIVERSAL	N/A	31	LED/3500K	4' STAIR FIXTURE WITH FROSTED ACRYLIC DIFFUSER
I	RC1	PHILIPS	L6RANZ10V/L6RA15835W	R	UNIVERSAL	N/A	19	LED/3500K	6" APERTURE DOWNLIGHT WITH SEMI-DIFFUSE REFLECTOR AND WIDE DISTRIBUTION; PROVIDE "IP66" OPTION AT CANOPY
I	RC1W	PHILIPS	L6RANZ10V/L6RA15835W	R	UNIVERSAL	N/A	19	LED/3500K	6" APERTURE WALL WASHER WITH SEMI-DIFFUSE REFLECTOR
I	RSH	PHILIPS	OM6LED-39-120/R6LED-35K-SWR/ OMTCA6-2 1/2" CEILING ADAPTER	R	UNIVERSAL	N/A	39	LED/3500K	6" APERTURE DOWNLIGHT WITH "DEADFRONT" NON-CONDUCTIVE LENS AND TRIM WITH MEDIUM DISTRIBUTION
4, L	SL1/2H	PHILIPS	ECF-1-2-55LA-3253-WW-UNV/ RA5-CB-16M-D1	POLE	UNIVERSAL	N/A	52	LED/3000K	SINGLE AREA LIGHTING FIXTURE WITH TYPE II OPTICS AND 16'-0" ROUND ALUMINUM POLE WITH ANCHOR BOLT COVER BASE
4, L	SL1/3H	PHILIPS	ECF-1-3-55LA-3253-WW-UNV/ RA5-CB-16M-D1	POLE	UNIVERSAL	N/A	52	LED/3000K	SINGLE AREA LIGHTING FIXTURE WITH TYPE III OPTICS AND 16'-0" ROUND ALUMINUM POLE WITH ANCHOR BOLT COVER BASE
4, L	SL1/3L	PHILIPS	ECF-1-3-55LA-3253-WW-UNV/ RA5-CB-10M-D1	POLE	UNIVERSAL	N/A	52	LED/3000K	SINGLE AREA LIGHTING FIXTURE WITH TYPE III OPTICS AND 10'-0" ROUND ALUMINUM POLE WITH ANCHOR BOLT COVER BASE
4, L	SL2/3H	PHILIPS	ECF-2-3-55LA-3253-WW-UNV/ RA5-CB-16M-D2	POLE	UNIVERSAL	N/A	104	LED/3000K	DUAL HEAD AREA LIGHTING FIXTURE WITH TYPE III OPTICS AND 16'-0" ROUND ALUMINUM POLE WITH ANCHOR BOLT COVER BASE
K	SL4	AAL	WND-ANG-12LED-WW-XX-WST	W	UNIVERSAL	N/A	32	LED/3000K	EGRESS WALL MOUNTED FIXTURE WITH TYPE III OPTICS
K	SL5	AAL	WND-ANG-12LED-WW-XX-WST	W	UNIVERSAL	N/A	32	LED/3000K	WALL MOUNTED FIXTURE WITH TYPE III OPTICS
M	SL6	HYDREL	PDX10-SS-18LED-WHT41-MVOLT-NSP-FLC-34S-IHL-RG-LP	R	UNIVERSAL	N/A	18	LED/3500K	INGRADE ACCENT FIXTURE WITH INTERNAL GLARE LOUVER AND AND EXTERNAL ROCK GUARD
B	⊗	MULE	ELX-1-A-GM-U-WH	U	UNIVERSAL	N/A	1.5	LED	SINGLE FACED EDGELIT ACRYLIC EXIT SIGN
B	⊗	MULE	ELX-2-A-GM-U-WH	U	UNIVERSAL	N/A	1.5	LED	DOUBLE FACED EDGELIT ACRYLIC EXIT SIGN
2, B	⊗ H	MULE	ARS-A-1-G-WW	U	UNIVERSAL	N/A	1	LED	SINGLE FACED DIECAST EXIT SIGN
2, B	⊗ L	MULE	ARS-A-1-G-WW-VRS1	U	UNIVERSAL	N/A	1	LED	SINGLE FACED DIECAST EXIT SIGN FOR ROUGH SERVICE APPLICATION MOUNTED 18" AFF TO THE TOP.
B	⊗ RS	MULE	WLMX-1-AC-G-WH	U	UNIVERSAL	N/A	1	LED	SINGLE FACED DIECAST EXIT SIGN FOR ROUGH SERVICE APPLICATION
B	EB	MULE	MRDHO-12-54-2X10W-SD-ERT	U	UNIVERSAL	2	20	MR16/HALOGEN	SELF-CONTAINED EMERGENCY LIGHTING FIXTURE WITH TWIN ADJUSTABLE HEADS

MOUNTING DESIGNATIONS

C	COVE	U	UNIVERSAL
P	PENDANT	W	WALL
R	RECESSED	AC	AIRCRAFT CABLE
S	SURFACE	BOL	BOLLARD
T	TRACK / RAIL / CABLE	POLE	POLE

FIXTURE MANUFACTURER OPTIONS (OR EQUAL)

- (A) PARAMOUNT, GUTH, RIG-A-LITE
- (B) EMERGI-LITE, SIGNTEX, DUAL-LITE
- (C) RIG-A-LITE, PHOENIX, APPLTEON
- (D) PINNACLE, LITHONIA, METALUMEN
- (E) KENALL, GUTH, CERTOLUX
- (F) COLUMBIA, LITHONIA, HE WILLIAMS
- (G) VISA, G LIGHTING, OCL
- (H) BIRCHWOOD, INTRA, ALW
- (I) INDY, PRESCOLITE, GOTHAM
- (J) KIM, SELUX, WE-EF
- (K) SOLERA, STERNBERG, VISIONAIRE
- (L) GARDCO, KIM, LITHONIA
- (M) KIM, LUMASCAPE, TARGETTI
- (N) LITHONIA, JESCO, PRUDENTIAL

LIGHTING FIXTURE SCHEDULE NOTES (-)

1. LIGHTING FIXTURE PACKAGE SUBMITTALS SHALL BE FULLY COORDINATED BETWEEN THE ELECTRICAL CONTRACTOR, LIGHTING FIXTURE REPRESENTATIVE(S), AND LIGHTING MANUFACTURERS TO ENSURE ALL PRODUCT, INSTALLATION, AND CONTROL REQUIREMENTS ARE MET PRIOR TO SUBMISSION FOR REVIEW. IT IS THE ELECTRICAL CONTRACTORS RESPONSIBILITY TO PROVIDE A PACKAGE MEETING ALL REQUIREMENTS OF THE PROJECT FOR A COMPLETE AND FULLY FUNCTIONAL LIGHTING SYSTEM.
2. PROVIDE FLOOR PROXIMITY SIGN IN ADDITION TO STANDARD SIGN ABOVE DOOR IN MAIN ELECTRICAL ROOM; MOUNT FLOOR PROXIMITY SIGN AT 18" A.F.F. TO THE TOP ON THE STRIKE SIDE OF DOOR. SIGN SHALL BE RECESSED MOUNTED AND PROVIDED WITH FLUSH POLYCARBONATE SHIELD.
3. PROVIDE THE FOLLOWING EMERGENCY BALLAST /DRIVER TYPES FOR EACH FIXTURE TYPE ENDING IN "E":
   - 3.1. TYPE LR22E: LED DRIVER AS SUPPLIED BY MANUFACTURER
   - 3.2. TYPE LR24E: LED DRIVER AS SUPPLIED BY MANUFACTURER
   - 3.3. TYPE RC1E: LED DRIVER AS SUPPLIED BY MANUFACTURER
   - 3.4. TYPE RSHE: LED DRIVER AS SUPPLIED BY MANUFACTURER

   REFER TO EMERGENCY BALLAST / DRIVER WIRING DETAIL. FIXTURE REQUIRE UN-SWITCHED HOT CONDUCTOR TO CHARGE INTEGRAL BATTERY (3#12, 1#12G MINIMUM).
4. SITE LIGHTING POLES SHALL BE PROVIDED WITH FULL BASE COVERS TO MATCH PROFILE OF POLE; NUT COVERS ONLY ARE NOT ACCEPTABLE.
5. PROVIDE ALCS ADDRESSABLE INPUT/OUTPUT (I/O) MODULE FOR EVERY FIXTURE (EXCEPT WHERE FIXTURES CAN BE GROUPED WHILE MAINTAINING DESIGNED CONTROL SCHEME). WHERE FIXTURES ARE LOCATED IN HARD CEILING AREAS THE I/O MODULE SHALL BE REMOTE MOUNTED IN ACCESSIBLE AREA ABOVE AN A.C.T. CEILING OR EXPOSED IN AN UNFINISHED UTILITY SPACE. WHERE FIXTURES ARE LOCATED OUTDOORS THE I/O MODULE SHALL BE LOCATED IMMEDIATELY ADJACENT TO THE PANEL SERVING THE FIXTURES. REFER TO "AUTOMATED LIGHTING CONTROL SYSTEM TYPICAL ONE-LINE DIAGRAM" AND SPECIFICATIONS FOR FURTHER INFORMATION.

LIGHTING GENERAL NOTES

1. MANUFACTURERS AND CATALOG NUMBERS IDENTIFIED IN THE "LIGHTING FIXTURE SCHEDULE" SHALL SERVE TO ESTABLISH THE BASIS OF DESIGN FOR EACH LIGHTING FIXTURE TYPE. PRODUCTS OF EQUAL APPEARANCE, CONSTRUCTION, PERFORMANCE, AND WARRANTY COVERAGE FROM MANUFACTURERS OTHER THAN THOSE IDENTIFIED MAY BE PROPOSED FOR USE ON THIS PROJECT, SUBJECT TO REVIEW AND APPROVAL BY THE ARCHITECT AND ENGINEER. THE "FIXTURE MANUFACTURER OPTIONS (OR EQUAL)" LISTING IS PROVIDED FOR GUIDANCE IN IDENTIFYING MANUFACTURERS CAPABLE OF PROVIDING EQUAL PRODUCTS, BUT IN NOW WAY LIMITS MANUFACTURERS OR PRODUCTS THAT MAY BE PROPOSED AS EQUALS FOR THE PROJECT.
2. "LIGHTING FIXTURE SCHEDULE" REMARKS, "LIGHTING FIXTURE SCHEDULE NOTES", "LIGHTING GENERAL NOTES", AND NOTATIONS ELSEWHERE MAY INDICATE FEATURES AND ACCESSORIES THAT ARE NOT INDICATED IN THE CATALOG NUMBER BUT ARE REQUIRED FOR THE PROJECT. PRODUCTS OTHER THAN THOSE SPECIFIED SUBMITTED SHALL BE DOCUMENTED FOR CONFORMANCE IN PERFORMANCE, CONSTRUCTION, AND APPEARANCE WITH THE CRITERIA ESTABLISHED BY THE SPECIFIED PRODUCT.
3. FURNISH ALL LIGHTING FIXTURES COMPLETE WITH MOUNTING ACCESSORIES TO MEET THE JOB REQUIREMENTS. VERIFY ROOM SURFACE CONSTRUCTION AND FINISHES PRIOR TO ORDERING FIXTURES TO ENSURE PROPER MOUNTING PROVISIONS AND FIXTURE FITTINGS. REFER TO LATEST ARCHITECTURAL DRAWINGS.
4. VERIFY ALL FIXTURE MOUNTING HEIGHTS AND LOCATIONS WITH LATEST ARCHITECTURAL DRAWINGS. EXACT LOCATION OF FIXTURES SHALL BE CONFIRMED WITH THE ARCHITECT PRIOR TO START OF ROUGHING.
5. LED ARRAYS, MODULES, AND LIGHT ENGINES SHALL HAVE KELVIN COLOR TEMPERATURE AS SCHEDULED HAVING A MINIMUM COLOR RENDERING INDEX (CRI) OF 82 AND A MINIMUM L70 LIFETIME RATING OF 50,OOO HOURS AT 25°C AMBIENT. LED DRIVERS SHALL HAVE 0-10V DIMMING CONTROL WITH FULLY ISOLATED CONTROL INPUTS AND MINIMUM POWER LEVEL OF 10%. LED FIXTURES WITH ARRAY / MODULE AND DRIVER PACKAGES OR LIGHT ENGINES SHALL HAVE PUBLISHED IESNA LM-79 AND LM-80 TESTING DATA AS A STANDARD MANUFACTURED OFFERING. INDIVIDUAL COMPONENT TESTING DATA WILL NOT BE ACCEPTED. ALL FIXTURES SHALL BE "DESIGN LIGHTS CONSORTIUM" (DLC) OR "ENERGYSTAR" LISTED, OR FURNISHED WITH DATA INDICATING CONFORMANCE WITH LATEST APPLICABLE LISTING CRITERIA.
6. FIXTURE LETTERS SHOWN ONCE ON A CONTINUOUS ROW OF FIXTURES SHALL BE TYPICAL FOR THAT ROW UNLESS OTHERWISE INDICATED. PROVIDE RUN LENGTH AS INDICATED (NUMERICALLY OR GRAPHICALLY) OR CONTINUOUS WHERE SHOWN BETWEEN TWO ARCHITECTURAL ELEMENTS (WALLS, SOFFITS, COLUMNS, ETC.).
7. LINEAR ROWS OF RECESSED, SURFACE, OR SUSPENDED FLUORESCENT FIXTURES SHALL BE INSTALLED TO PROVIDE CONTINUOUS RUN LENGTHS AS INDICATED ON THE DRAWINGS. PROVIDE ALL REQUIRED FITTINGS, CONNECTORS, SUPPORTS, TRIMS, ETC. SO THAT RUNS ARE A COMPLETE ASSEMBLY WITH THE APPEARANCE OF A SINGLE UNIT. ROWS SHALL BE CONFIGURED FOR MINIMUM NUMBER OF FEEDS, JOINTS, AND MOUNTINGS. PROVIDE ROW AND PATTERN CONFIGURATION DRAWINGS FOR REVIEW PRIOR AND APPROVAL PRIOR TO RELEASE OF MATERIAL ORDER.
8. PROVIDE FLAT ROUND CANOPIES FOR SUSPENDED FIXTURE LOCATIONS WHERE SUSPENSIONS MOUNTS TO UNFINISHED CEILING STRUCTURE (WHERE LOCATED IN FINISHED SPACES) AND WHERE PASSING THROUGH SUSPENDED CEILINGS (CONFIRM WHETHER IN TILE OR AT GRID). PROVIDE SWIVEL ALIGNERS FOR SUSPENSIONS WHERE REQUIRED FOR SLOPED CEILINGS. ENTIRE SUSPENSION ASSEMBLY SHALL BE SUPPLIED BY MANUFACTURER OF FIXTURES.
9. FIXTURES WITH LOUVERS SHALL BE PROVIDED WITH HIGH TRANSMISSION (95% OR BETTER) DIFFUSING LENSES OR FILMS TO OBSCURE DIRECT LAMP VIEWING.
10. FIXTURES SHALL BE SUPPORTED FROM THE BUILDING STRUCTURE, INDEPENDENT OF HUNG CEILINGS. DO NOT TAP METAL ROOF DECK FOR SUPPORT OF ANY ELECTRICAL EQUIPMENT. PROVIDE UNISTRUT AS REQUIRED FOR SUPPORT OF ALL ELECTRICAL EQUIPMENT.
11. REFER TO SPECIFICATIONS FOR SEISMIC SUPPORT, RESTRAINT, AND BRACING REQUIREMENTS OF THIS PROJECT.
12. PROVIDE TYPE AND QUANTITY OF BALLASTS, DRIVERS, AND TRANSFORMERS AS REQUIRED TO PROVIDE CONTROL METHOD INDICATIONS ON THE PLANS, INCLUDING BUT NOT LIMITED TO THE FOLLOWING: SWITCHING SUBSCRIPTS, NOTES, SCHEDULE REMARKS / DESCRIPTIONS, AND DETAILS. QUANTITY OF BALLASTS, DRIVERS, AND/OR TRANSFORMERS SHALL BE THE MINIMUM REQUIRED TO PROVIDE CONTROL INDICATED TO MAINTAIN THE LOWEST CONNECTED LOAD OF LIGHTING SYSTEM POSSIBLE. TANDEM WIRING OF FIXTURES SHALL BE PROVIDED WHERE NECESSARY AND WITHIN THE WIRING DISTANCE RESTRICTIONS OF THE MANUFACTURER'S INSTALLATION REQUIREMENTS.
13. EVERY SPACE ENCLOSED BY FLOOR TO CEILING WALLS SHALL BE PROVIDED WITH A MINIMUM OF ONE MANUAL LIGHTING SWITCH AND ONE CEILING MOUNTED OCCUPANCY SENSOR. ADDITIONAL CONTROLS SHALL BE AS INDICATED ON THE PLAN OR AS SPECIFIED ELSEWHERE.
14. ALL LED SOURCES, DRIVERS, AND CONTROLS SHALL MEET THE LATEST UTILITY COMPANY INCENTIVE REQUIREMENTS. REFER TO THE LATEST PROGRAM REQUIREMENTS DOCUMENTATION AND COORDINATE WITH THE UTILITY COMPANY TO ENSURE COMPLIANCE.
15. ALL EXIT SIGNS SHALL BE CIRCUITED AHEAD OF ANY LOCAL SWITCH CONTROL. WHERE CONTROLLABLE CIRCUIT BREAKER CONTROL SYSTEMS ARE UTILIZED THE CIRCUITS SERVING EXIT SIGNS SHALL BE SWITCHED "OFF" WHENEVER THE BUILDING IS UNOCCUPIED.
16. EXIT SIGNS TO BE PROVIDED WITH ARROWS AS INDICATED ON DRAWINGS. TYPICALLY MOUNT ON CEILING WHERE VISIBLE OR ON WALL WHERE CEILING MOUNTING IS NOT PRACTICAL. EDGE-LIT SIGNS SHALL GENERALLY HAVE CLEAR PANELS EXCEPT FOR DOUBLE FACED UNITS AND SINGLE FACED UNITS ABLE TO BE VIEWED FROM BEHIND WHICH SHALL HAVE OPAQUE / MIRRORED PANELS. REFER TO ARCHITECTURAL DRAWINGS FOR INDICATION OF MOUNTING REQUIREMENTS.
17. PROVIDE SPARE EXIT SIGNS FOR INSTALLATION DURING CONSTRUCTION. INCLUDE 100' OF TYPE MC CABLE BRANCH CIRCUITING AND INSTALLATION LABOR. REFER TO ELECTRICAL SPECIFICATIONS FOR QUANTITIES AND INSTALLATION REQUIREMENTS.
18. EXIT SIGNS SHALL BE THE SELF-CONTAINED TYPE WITH INTEGRAL BATTERY BACK-UP AND SELF-DIAGNOSTICS WHERE NO LIFE SAFETY POWER SOURCE IS AVAILABLE, REGARDLESS OF MODEL / SERIES SPECIFIED.
19. EXIT SIGNS INSTALLED IN GYMNASIUMS, LOCKER ROOMS, AND ANY OTHER DESIGNATED AREAS SHALL BE PROVIDED WITH POLYCARBONATE FACE PLATE / SHIELD AS PART OF EXIT SIGN PACKAGE FROM SAME MANUFACTURER.
20. PROVIDE A SELF CONTAINED EMERGENCY LIGHTING UNIT WITH TWIN ADJUSTABLE HEADS (TYPE "EB" WHERE SCHEDULED) AT EACH FIRE ALARM CONTROL PANEL AND REMOTE ANNUNCIATOR. EXACT MOUNTING TO BE COORDINATED IN FIELD WITH ARCHITECT OR ENGINEER.
21. SELF-CONTAINED EMERGENCY LIGHTING UNITS SHALL BE WIRED TO LIGHTING CIRCUIT SERVING ROOM OR SPACE TO BE ILLUMINATED AHEAD OF ANY SWITCHING CONTROLS.
22. FIXTURES WITH MULTI WATTAGE BALLASTS OR DRIVERS SHALL BE LABELED FROM THE FACTORY FOR THE WATTAGE SPECIFIED TO ENSURE COMPLIANCE WITH ENERGY CODE CALCULATIONS.
23. FINISH FOR ALL FIXTURES SHALL BE SELECTED BY THE ARCHITECT FROM THE MANUFACTURER'S CATALOG OPTIONS.
24. WHERE FIXTURES OTHER THAN THE SPECIFIED PRODUCTS ARE PROPOSED, THE CONTRACTOR SHALL PROVIDE LIGHT LEVEL CALCULATIONS IN ACCORDANCE WITH IESNA STANDARDS TO JUSTIFY THAT THE SUBSTITUTED FIXTURES ARE OF EQUAL PERFORMANCE TO THE SPECIFIED PRODUCTS (APPLIES TO ALL FIXTURES IN ALL SPACES.)

GARCIA GALUSKA DESOUSA INC.
CONSULTING ENGINEERS
370 Faunce Corner Road, Dartmouth, MA 02747 - 1271
508 - 998 - 5700 FAX 508 - 998 - 0883 E - MAIL info@g - g - d . com

ARCHITECTS • PROJECT MANAGERS
DORE & WHITTIER ARCHITECTS, INC.
Burlington, VT 05401
212 Battery Street
P : 802.863.1428
F : 802.863.6955
Newburyport, MA 01950
260 Merrimac Street, Bldg 7
P : 978.499.2999
F : 978.499.2944
www.doreandwhittier.com

Project No. 14-690

WESTFORD FIRE STATION
65 Boston Road
Westford, MA 01886

COPYRIGHT © 2014 by Dore & Whittier Architects Inc. (D&W) These documents are D&W's instruments of service and as such D&W retains all copyrights, common law and statutory rights. Use of these documents without D&W's express, written permission will result in copyright infringement.

SCHEMATIC DESIGN

REVISION:	Date:

DATE: 11/21/2015 | SCALE:
DRAWN BY: MLP | CHK'D BY: DMP

SHEET TITLE: LIGHTING FIXTURE SCHEDULE

SHEET #: E002

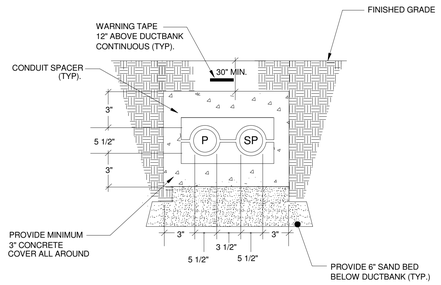

1 / E004 DUCT BANK SECTION "A-A"

SCALE: N.T.S.

- P — 5" PRIMARY- SCHEDULE 40 P.V.C. PROVIDE 3/16" PULL LINE IN CONDUIT.
- SP — 5" SPARE - SCHEDULE 40 P.V.C. PROVIDE 3/16" PULL LINE IN CONDUIT.

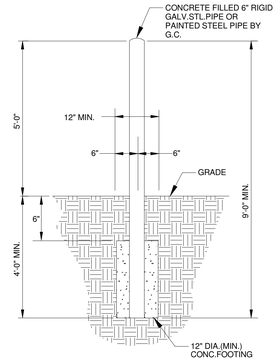

2 / E004 TYPICAL BOLLARD DETAIL

SCALE: N.T.S

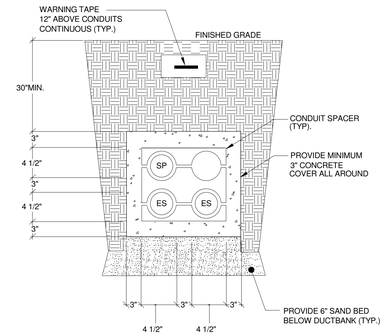

3 / E004 SECONDARY DUCT-BANK DETAIL "C-C"

SCALE: N.T.S

- ES — 4" SECONDARY- SCHEDULE 40 P.V.C.
- SP — 4" SPARE - SCHEDULE 40 P.V.C. PROVIDE PULL LINE.

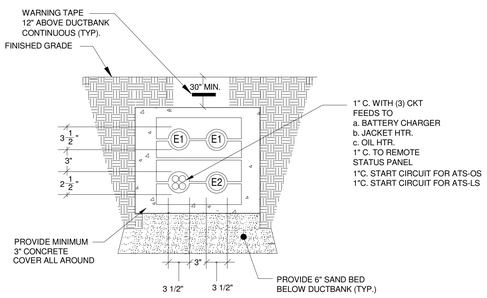

4 / E004 GENERATOR DUCT BANK SECTION "D-D"

SCALE: N.T.S.

- E1 — 3" ATS-OS SCHEDULE 40 P.V.C.
- E2 — 2" ATS-LS SCHEDULE 40 P.V.C.

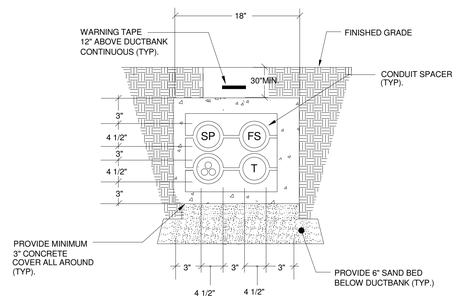

5 / E004 DUCT BANK SECTION "E-E"

SCALE: N.T.S.

- FS — 2" FIRE SIGNAL - SCHEDULE 40 P.V.C. PROVIDE 3/16" PULL ROPE.
- T — 4" TELEPHONE - SCHEDULE 40 P.V.C. PROVIDE 3/16" PULL ROPE.
- 4" FIBER - SCHEDULE 40 P.V.C. PROVIDE (3) 1 1/4" INNERDUCTS w/ PULL WIRES.
- SP — 4" CABLE TV - SCHEDULE 40 P.V.C. PROVIDE 3/16" PULL ROPE.

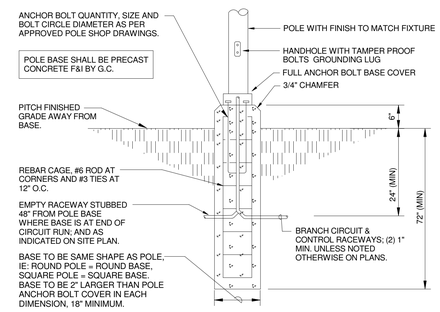

6 / E004 LIGHT POLE BASE DETAIL

SCALE: N.T.S.

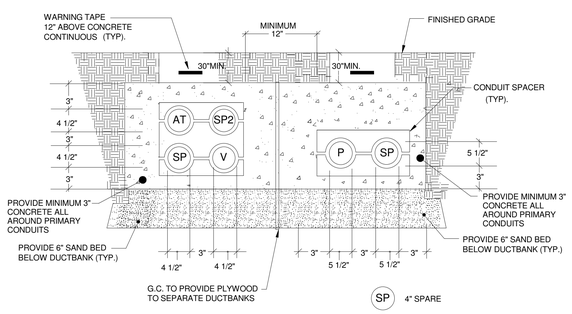

7 / E004 DUCT BANK SECTION

SCALE: N.T.S.

- SP — 4" SPARE
- AT — 2" AT&T CELL TOWER
- SP2 — 2" SPARE
- V — 3" VERIZON VAULT
- P — 5" PRIMARY- SCHEDULE 40 P.V.C. PROVIDE 3/16" PULL LINE IN CONDUIT.
- SP — 5" SPARE - SCHEDULE 40 P.V.C. PROVIDE 3/16" PULL LINE IN CONDUIT.

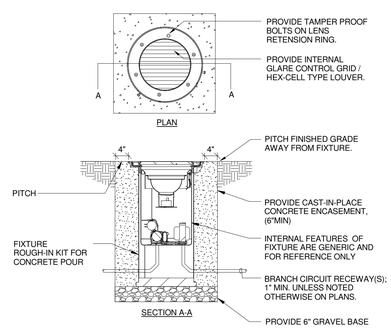

8 / E004 IN GRADE ACCENT FIXTURE

SCALE: N.T.S

GARCIA GALUSKA DESOUSA
CONSULTING ENGINEERS
375 Totten Pond Road, Waltham, MA 02451-1921
508 . 998 . 5700 FAX 508 . 998 . 0883 E - MAIL info@g - g - d . com

ARCHITECTS • PROJECT MANAGERS
Burlington, VT 05401
T : 802 . 863 . 1458
F : 802 . 863 . 1435
Northampton, MA 01060
260 Meadow Street, Bldg 7
T : 413 . 586 . 2350
F : 978 . 499 . 2944
www.dore-andwhitter.com
DORE & WHITTER ARCHITECTS, INC.

Project No. 14-690

WESTFORD FIRE STATION

65 Boston Road
Westford, MA 01886

COPYRIGHT © 2014 by Dore & Whitter Architects Inc. (D&W). These documents are D&W's instruments of service and as such are the sole property of D&W and are subject to copyright and other statutory rights. Use of these documents without D&W's express, written permission will result in copyright infringement.

SCHEMATIC DESIGN

REVISION:	Date:

DATE: 11/21/2015
SCALE:
DRAWN BY: MLP
CHK'D BY: DMP

SHEET TITLE: SITE DETAILS

SHEET #: E004

GENERAL LIGHTING NOTES:

1. EXACT LOCATIONS OF ALL FIXTURES AND DEVICES SHALL BE FULLY COORDINATED WITH ARCHITECTURAL PLANS, ELEVATIONS, SECTIONS AND THE WORK OF OTHER TRADES PRIOR TO ROUGH-IN. FULLY COORDINATED WITH ARCHITECTURAL PLANS, ELEVATIONS, SECTIONS AND THE WORK OF OTHER TRADES PRIOR TO ROUGH-IN. EXACT LOCATIONS OF ALL FIXTURES AND DEVICES SHALL BE FULLY COORDINATED WITH ARCHITECTURAL PLANS, ELEVATIONS, SECTIONS AND THE WORK OF OTHER TRADES PRIOR TO ROUGH-IN.
2. WIRING AND CONDUIT OR MC CABLE SHALL BE REQUIRED BETWEEN ALL LIGHTING FIXTURES, SWITCHES, DIMMERS, SENSORS, POWER PACKS, RELAYS, AND OTHER AUXILIARY DEVICES. WIRING AND CONDUIT OR MC CABLE IS SHOWN ON DRAWINGS ONLY FOR SPECIFIC ROUTES OR SPECIAL CONDITIONS. IT IS THE INTENT OF THESE DOCUMENTS THAT A COMPLETE BRANCH CIRCUIT AND CONTROL WIRING SYSTEM BE INSTALLED.
3. ALL BRANCH CIRCUIT CONDUCTORS SHALL BE 98% CONDUCTIVITY, COPPER MINIMUM #12 AWG SIZE, THWN/THHN INSULATION, 600 VOLTS RATED UNLESS OTHERWISE NOTED.
4. UTILITIES SHALL NOT PENETRATE STAIR ENCLOSURES, ELEVATOR SHAFTS, AND MACHINE ROOMS EXCEPT WHERE SPECIFICALLY SERVING THAT STAIR OR ELEVATOR.
5. METAL ROOF DECKS SHALL NOT BE TAPPED FOR SUPPORT OF ANY LIGHTING FIXTURES OR ELECTRICAL EQUIPMENT. PROVIDE UNISTRUT OR OTHER SUPPLEMENTAL SUPPORT FITTINGS TO BE ATTACHED TO BUILDING STRUCTURAL FRAMING AS REQUIRED FOR SUPPORT OF ALL LIGHTING FIXTURES AND ELECTRICAL EQUIPMENT.
6. ALL EXPOSED CONDUITS, RACEWAYS, WIREWAYS, BOXES, FITTINGS AND SIMILAR COMPONENTS SHALL BE PAINTED TO MATCH SURROUNDING FINISH WITH EQUAL TYPE PRODUCT(S).
7. ALL OCCUPANCY AND DAYLIGHT HARVESTING PHOTOSENSORS SHALL BE LOCATED IN COMPLIANCE WITH THE MANUFACTURER'S RECOMMENDATIONS FOR EACH INDIVIDUAL SPACE. E.C. SHALL PROVIDE A CEILING PLAN LOCATING ALL SENSORS WHICH HAS BEEN FULLY COORDINATED WITH THE WORK OF OTHER TRADES FOR FINAL REVIEW AND APPROVAL. E.C. SHALL PROVIDE THE SENSOR VENDOR(S) WITH ALL INFORMATION REQUIRED TO FULLY UNDERSTAND THE CONDITIONS OF EACH SPACE.
8. INDIRECT AND DIRECT/INDIRECT FIXTURES SHALL BE SUSPENDED WITH AIRCRAFT CABLE TO PROVIDE A MINIMUM CLEARANCE 18" FROM THE CEILING TO TOP OF EACH FIXTURE. FIELD CONDITIONS REQUIRING A SHORTER SUSPENSION SHALL BE BROUGHT TO THE ATTENTION OF THE ARCHITECT AND ENGINEER PRIOR TO COMMENCING WITH FIXTURE INSTALLATIONS.
9. FIXTURES ON PLANS SHALL BE PROVIDED WITH 0-10V DIMMING DRIVER(S) OR LIGHT ENGINE(S) AS REQUIRED FOR LED SOURCES SPECIFIED TO BE CONTROLLED VIA A 0-10V SIGNAL FROM THE ALCS, DAYLIGHT HARVESTING PHOTOSENSORS, THEATRICAL DIMMING SYSTEM OR OTHER CONTROLS.
10. REFER TO "AUTOMATED LIGHTING CONTROL SYSTEM (ALCS) - TYPICAL ONE LINE DIAGRAM" AND SPECIFICATIONS FOR DETAILED LIGHTING CONTROL REQUIREMENTS.
11. ALL EXTERIOR EQUIPMENT, FIXTURES, AND DEVICES SHALL BE RATED IP65 (MINIMUM) AND BE CONSTRUCTED OF STAINLESS STEEL AND/OR MARINE GRADE ALUMINUM SUITABLE FOR COASTAL ENVIRONMENT APPLICATION. PAINTED FINISHES SHALL HAVE PASSED A MINIMUM 5,000 HOUR SALT SPRAY TEST.

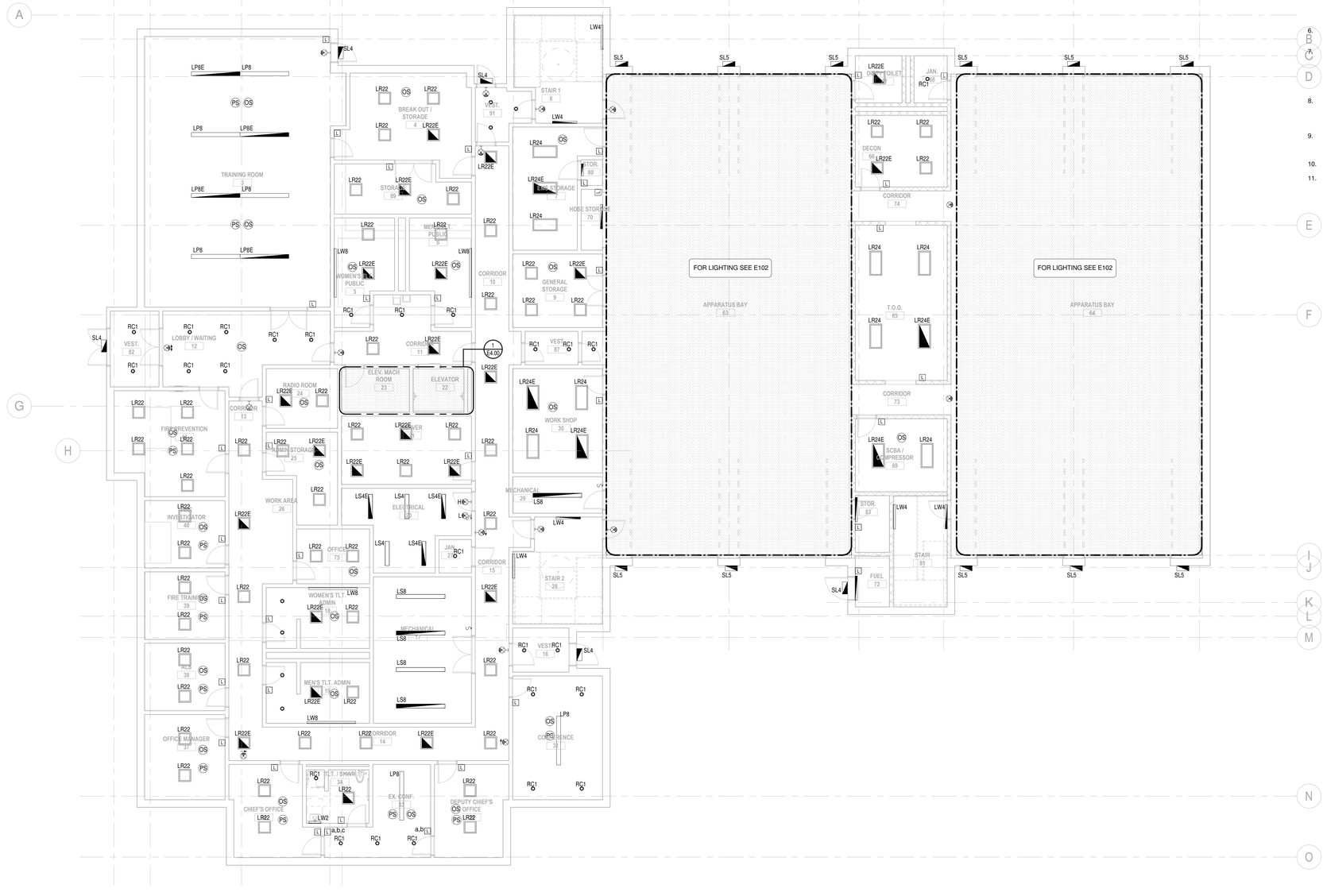

1 FIRST FLOOR PLAN - LIGHTING
1/8" = 1'-0"

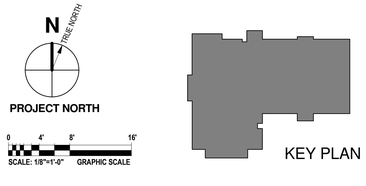

GARCIA GALUSKA DESOUSA
CONSULTING ENGINEERS
37 Stillwater Avenue, Bangor, ME 04401
508 . 998 . 5700 FAX 508 . 998 . 0883 E - MAIL info@g - g - d . com
02747 - 1400, MC

ARCHITECTS • PROJECT MANAGERS
Brattleboro, VT 05401
T : 802 . 257 . 5145
F : 802 . 863 . 1435
Northampton, MA 01060
T : 413 . 586 . 8686
F : 413 . 586 . 8690
Newburyport, MA 01950
260 Merrimac Street, Bldg 7
Newburyport, MA 01950
T : 978 . 499 . 2944
F : 978 . 499 . 2944
www.doreandwhitter.com
DORE & WHITTER ARCHITECTS, INC.

Project No.
14-690

WESTFORD FIRE STATION

65 Boston Road
Westford, MA 01886

COPYRIGHT © 2014 by Dore & Whitter Architects Inc. (D&W). These documents are D&W's instruments of service and as such D&W retains all copyrights, common law and statutory rights. Use of these documents without D&W's express, written permission will result in copyright infringement.

SCHEMATIC DESIGN

REVISION:	Date:

DATE: 11/21/2015	SCALE: As indicated
DRAWN BY: MLP	CHKD BY: Checker

SHEET TITLE:
FIRST FLOOR PLAN - LIGHTING

SHEET #:
E101

11/20/2015 2:31:42 PM C:\Users\Mike_Phillips\Documents\MEP - 690 - WESTFORD FIRE STATION_MLPhillips.rvt

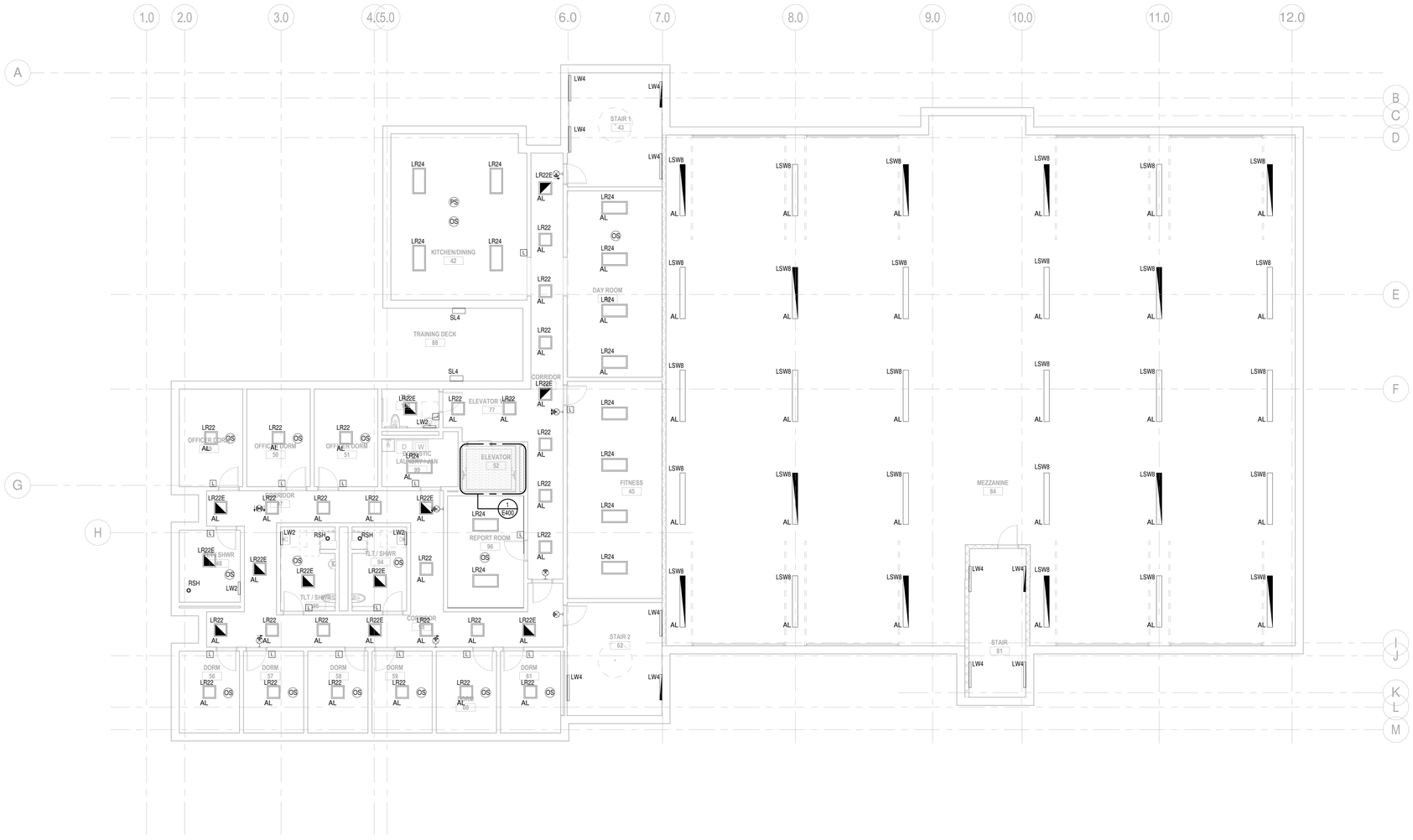

1 SECOND FLOOR PLAN - LIGHTING
1/8" = 1'-0"

GENERAL LIGHTING NOTES:

1. EXACT LOCATIONS OF ALL FIXTURES AND DEVICES SHALL BE FULLY COORDINATED WITH ARCHITECTURAL PLANS, ELEVATIONS, SECTIONS AND THE WORK OF OTHER TRADES PRIOR TO ROUGH-IN. FULLY COORDINATED WITH ARCHITECTURAL PLANS, ELEVATIONS, SECTIONS AND THE WORK OF OTHER TRADES PRIOR TO ROUGH-IN. EXACT LOCATIONS OF ALL FIXTURES AND DEVICES SHALL BE FULLY COORDINATED WITH ARCHITECTURAL PLANS, ELEVATIONS, SECTIONS AND THE WORK OF OTHER TRADES PRIOR TO ROUGH-IN.
2. WIRING AND CONDUIT OR MC CABLE SHALL BE REQUIRED BETWEEN ALL LIGHTING FIXTURES, SWITCHES, DIMMERS, SENSORS, POWER PACKS, RELAYS, AND OTHER AUXILIARY DEVICES. WIRING AND CONDUIT OR MC CABLE IS SHOWN ON DRAWINGS ONLY FOR SPECIFIC ROUTES OR SPECIAL CONDITIONS. IT IS THE INTENT OF THESE DOCUMENTS THAT A COMPLETE BRANCH CIRCUIT AND CONTROL WIRING SYSTEM BE INSTALLED.
3. ALL BRANCH CIRCUIT CONDUCTORS SHALL BE 98% CONDUCTIVITY. COPPER MINIMUM #12 AWG SIZE, THWN/THHN INSULATION, 600 VOLTS RATED UNLESS OTHERWISE NOTED.
4. UTILITIES SHALL NOT PENETRATE STAIR ENCLOSURES, ELEVATOR SHAFTS, AND MACHINE ROOMS EXCEPT WHERE SPECIFICALLY SERVING THAT STAIR OR ELEVATOR.
5. METAL ROOF DECKS SHALL NOT BE TAPPED FOR SUPPORT OF ANY LIGHTING FIXTURES OR ELECTRICAL EQUIPMENT. PROVIDE UNISTRUT OR OTHER SUPPLEMENTAL SUPPORT FITTINGS TO BE ATTACHED TO BUILDING STRUCTURAL FRAMING AS REQUIRED FOR SUPPORT OF ALL LIGHTING FIXTURES AND ELECTRICAL EQUIPMENT.
6. ALL EXPOSED CONDUITS, RACEWAYS, WIREWAYS, BOXES, FITTINGS AND SIMILAR COMPONENTS SHALL BE PAINTED TO MATCH SURROUNDING FINISH WITH EQUAL TYPE PRODUCT(S).
7. ALL OCCUPANCY AND DAYLIGHT HARVESTING PHOTOSENSORS SHALL BE LOCATED IN COMPLIANCE WITH THE MANUFACTURER'S RECOMMENDATIONS FOR EACH INDIVIDUAL SPACE. E.C. SHALL PROVIDE A CEILING PLAN LOCATING ALL SENSORS WHICH HAS BEEN FULLY COORDINATED WITH THE WORK OF OTHER TRADES FOR FINAL REVIEW AND APPROVAL. E.C. SHALL PROVIDE THE SENSOR VENDOR(S) WITH ALL INFORMATION REQUIRED TO FULLY UNDERSTAND THE CONDITIONS OF EACH SPACE.
8. INDIRECT AND DIRECT/INDIRECT FIXTURES SHALL BE SUSPENDED WITH AIRCRAFT CABLE TO PROVIDE A MINIMUM CLEARANCE 18" FROM THE CEILING TO TOP OF EACH FIXTURE. FIELD CONDITIONS REQUIRING A SHORTER SUSPENSION SHALL BE BROUGHT TO THE ATTENTION OF THE ARCHITECT AND ENGINEER PRIOR TO COMMENCING WITH FIXTURE INSTALLATIONS.
9. FIXTURES ON PLANS SHALL BE PROVIDED WITH 0-10V DIMMING DRIVER(S) OR LIGHT ENGINE(S) AS REQUIRED FOR LED SOURCES SPECIFIED TO BE CONTROLLED VIA A 0-10V SIGNAL FROM THE ALCS, DAYLIGHT HARVESTING PHOTOSENSORS, THEATRICAL DIMMING SYSTEM OR OTHER CONTROLS
10. REFER TO "AUTOMATED LIGHTING CONTROL SYSTEM (ALCS) - TYPICAL ONE LINE DIAGRAM" AND SPECIFICATIONS FOR DETAILED LIGHTING CONTROL REQUIREMENTS.
11. ALL EXTERIOR EQUIPMENT, FIXTURES, AND DEVICES SHALL BE RATED IP65 (MINIMUM) AND BE CONSTRUCTED OF STAINLESS STEEL AND/OR MARINE GRADE ALUMINUM SUITABLE FOR COASTAL ENVIRONMENT APPLICATION. PAINTED FINISHES SHALL HAVE PASSED A MINIMUM 5,000 HOUR SALT SPRAY TEST.

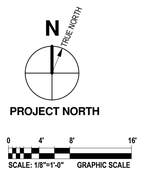

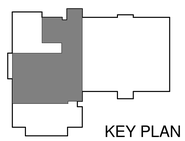

KEY PLAN

GARCIA GALUSKA DESOUSA
CONSULTING ENGINEERS
37 Offices Park, Hadley, MA 01035
508 - 586 - 5700 FAX 508 - 586 - 0883 E - MAIL info@g - g - d . com
Hartford, CT
06717 - MC

ARCHITECTS • PROJECT MANAGERS
Burlington, VT 05401
T : 802 863 1455
F : 802 863 1456
Northampton, MA 01060
260 Meadow Street Bldg 7
T : 413 586 2350
F : 978 499 2944
www.doreandwhittier.com
DORE & WHITTIER ARCHITECTS, INC.

Project No.
14-690

WESTFORD FIRE STATION

65 Boston Road
Westford, MA 01886

COPYRIGHT © 2014 by Dore & Whitter Architects Inc. (D&W)
These documents are D&W's instruments of service and as such D&W retains all copyrights, common law and statutory rights. Use of these documents without D&W's express, written permission will result in copyright infringement.

SCHEMATIC DESIGN

REVISION:	Date:

DATE: 11/21/2015	SCALE: As indicated
DRAWN BY: MLP	CHKD BY: Checker

SHEET TITLE:
SECOND FLOOR PLAN - LIGHTING

SHEET #:
E102

11/20/2015 2:31:42 PM C:\Users\Mike_Phillips\Documents\MEP - 690 - WESTFORD FIRE STATION_MLPhillips.rvt

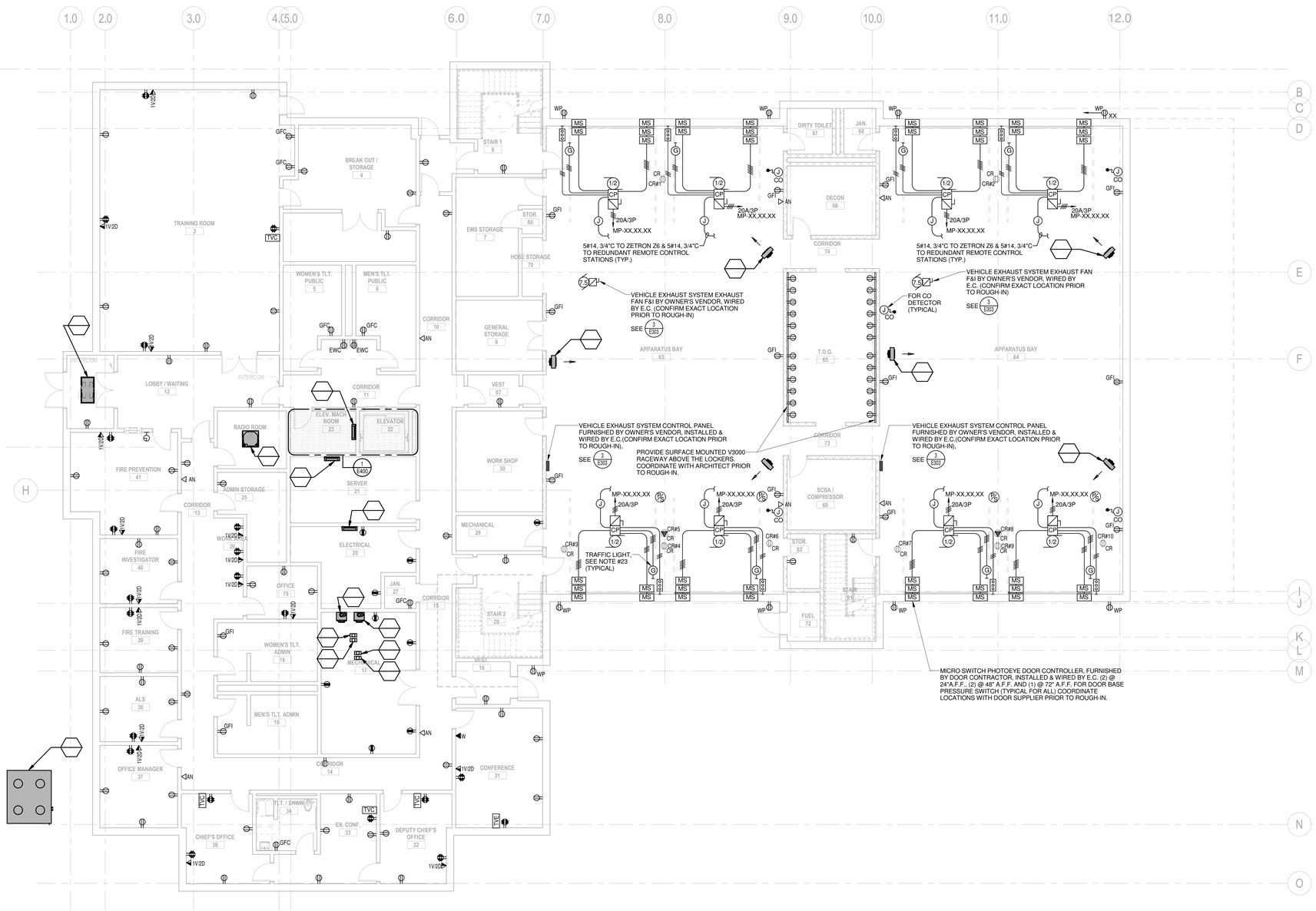

1 FIRST FLOOR PLAN - POWER
1/8" = 1'-0"

GENERAL POWER NOTES:

1. COORDINATE EXACT LOCATION OF ALL DEVICES AND EQUIPMENT WITH ARCHITECT PRIOR TO INSTALLATION.
2. REFER TO MECHANICAL PLANS FOR ANY CHANGES AND FOR EXACT LOCATION OF ALL HVAC EQUIPMENT.
3. WIRING IS SHOWN ON DRAWINGS ONLY FOR SPECIFIC ROUTES OR SPECIAL CONDITIONS.
4. WIRING AND CONDUIT SHALL BE REQUIRED BETWEEN ALL OUTLETS INDICATED WITH CIRCUIT NUMBERS AND PANEL DESIGNATIONS.
5. ALTHOUGH ALL BRANCH CIRCUIT WIRE AND CONDUIT IS NOT SHOWN, IT IS THE INTENT OF THESE DOCUMENTS THAT A COMPLETE BRANCH CIRCUIT WIRING SYSTEM BE INSTALLED.
6. ALL BRANCH CIRCUIT CONDUCTORS SHALL BE TYPE MC 98% CONDUCTIVITY, COPPER MINIMUM #12 AWG SIZE, THWN/THHN INSULATION, 600 VOLTS RATED UNLESS OTHERWISE NOTED.
7. REFER TO FIRE PROTECTION PLANS FOR ANY CHANGES AND FOR EXACT LOCATION OF ALL FLOW SWITCH, TAMPER SWITCH, ETC.
8. DO NOT PENETRATE STAIRS WITH ANY UTILITIES EXCEPT FOR UTILITIES SPECIFICALLY SERVING THAT STAIR.
9. WHERE CONDUITS AND/OR BOXES CANNOT BE FLUSH MOUNTED IN BUILDING PROVIDE A SYSTEM OF SURFACE METAL RACEWAYS AND BOXES IN ACCORDANCE WITH ARTICLE 386, EQUAL TO WIREMOLD FOR ALL FINISH SPACES WHERE PUBLIC HAS ACCESS, INCLUDING CORRIDORS, CLASSROOMS, OFFICES, ETC.
10. CONFIRM RATINGS & FINAL LOCATIONS OF EQUIPMENT WITH OWNER PRIOR TO ROUGHING.
11. ALL OUTLETS ON EXTERIOR WALLS WITH CASEWORK SHALL BE MOUNTED 6" ABOVE CASEWORK. CONFIRM HEIGHT OF CASEWORK WITH HVAC AND ARCHITECT PRIOR TO ROUGHING.
12. TYPICALLY PROVIDE GROUND FAULT INTERRUPTER TYPE RECEPTACLES WITHIN 6 FEET OF WATER SOURCES.
13. PROVIDE ALL EMPTY CONDUITS WITH PULL-STRINGS.
14. TYPICALLY PROVIDE (2) 4" SLEEVES OVER EACH CORRIDOR DOOR.
15. ROVIDE (2) 2" THROUGH-WALL SLEEVE ABOVE CEILING OVER THE DOORS INTO EACH ROOM LEADING FROM THE CORRIDOR FOR COMMUNICATIONS/DATA WIRING.
16. LOCATE ALL WALL TELEPHONE OUTLETS 12 INCHES AWAY FROM ALL OTHER OUTLETS/DEVICES.
17. PROVIDE (2) 1" SLEEVES OVER EACH DOOR FOR TEL./DATA SECURITY AND SOUND SYSTEM WIRING. TEL./DATA SHALL BE DEDICATED TO (1) OF THE CONDUITS.
18. ELECTRICAL CONTRACTOR SHALL PROVIDE ALL BOXES AND CONDUITS REQUIRED FOR AUDIO/VISUAL SYSTEMS SECTION 274100 DEVICES AS SHOWN ON AV DRAWINGS. ALL LOCATIONS OF POWER AND A/V OUTLET BOXES SHALL BE COORDINATED WITH ARCHITECT PRIOR TO ROUGHING.

APPARATUS BAY CORD REEL SCHEDULE

	REF. #	APPARATUS DESCRIPTION	MANUFACTURER	CORD REEL MODEL #	VOLT, PHASE	CIRCUIT BREAKER	PANEL & CIRCUIT#	φ	▲
①②③	CR#1	APPARATUS BAY 63	HUBBELL	HBL45123C20	120V,1PH	20A/1P	MP-XX	X	
①②③	CR#2	APPARATUS BAY 64	HUBBELL	HBL45123C20	120V,1PH	20A/1P	MP-XX	X	
①②③	CR#3	APPARATUS BAY 63	HUBBELL	HBL45123C20	120V,1PH	20A/1P	MP-XX	X	
①②③	CR#4	APPARATUS BAY 63	HUBBELL	HBL45123C20	120V,1PH	20A/1P	MP-XX	X	
①②③④	CR#5	APPARATUS BAY 63	HUBBELL	HBL501032	120V,1PH	30A/1P	MP-XX		X
①②③	CR#6	APPARATUS BAY 63	HUBBELL	HBL45123C20	120V,1PH	20A/1P	MP-XX	X	
①②③	CR#7	APPARATUS BAY 64	HUBBELL	HBL45123C20	120V,1PH	20A/1P	MP-XX	X	
①②③④	CR#8	APPARATUS BAY 64	HUBBELL	HBL501032	120V,1PH	30A/1P	MP-XX		X
①②③	CR#9	APPARATUS BAY 64	HUBBELL	HBL45123C20	120V,1PH	20A/1P	MP-XX	X	
①②③	CR#10	APPARATUS BAY 64	HUBBELL	HBL45123C20	120V,1PH	20A/1P	MP-XX	X	

NOTES:

① PROVIDE ALL MOUNTING BRACKETS AND STRUCTURAL SUPPORT FOR MOUNTING OF CORD REELS TO BEAMS WHERE INDICATED ON DRAWINGS FIELD COORDINATE WITH G.C. PROVIDE PIVOT BASE ON ALL REELS.

② CONFIRM OUTLET TYPE WITH SPECIFIC APPARATUS THAT WILL BE SERVED.

③ THE CORD SHALL BE ARRANGED SO THAT THE LOWEST POINT IS AT LEAST 6" A.F.F. PROVIDE GFI TYPE CIRCUIT BREAKER FOR EACH CIRCUIT. DELETE GFI TYPE CIRCUIT BREAKER IF APPROVED BY WIRING INSPECTOR. LABEL EACH OUTLET "NOT TO BE USED FOR PORTABLE LIGHTING, HAND TOOLS OR APPLIANCES".

④ PROVIDE WITH 2#10&#10G WIRING, AND 2#10&#10G, 3/4"C HOMERUN TO PANEL.

N TRUE NORTH
PROJECT NORTH

0 4' 8' 16'
SCALE: 1/8"=1'-0" GRAPHIC SCALE

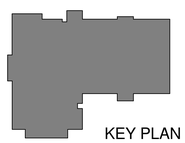
KEY PLAN

GARCIA GALUSKA DESOUSA
CONSULTING ENGINEERS
37 Stone Street, Lowell, MA 01852 USA
508 . 968 . 5700 FAX 508 . 968 . 0983 E - MAIL info@g - g - d . com

ARCHITECTS • PROJECT MANAGERS
Burlington, VT 05401
T E L E P H O N E 802 . 863 . 1455
F A X 802 . 863 . 1456
Northampton, MA 01060
260 Meadow Street, Bldg 7
T E L E P H O N E 413 . 586 . 2350
F A X 413 . 586 . 2351
www.doreandwhittier.com
DORE & WHITTIER ARCHITECTS, INC.

Project No. 14-690

WESTFORD FIRE STATION

65 Boston Road
Westford, MA 01886

COPYRIGHT © 2014 by Dore & Whitter Architects Inc. (D&W). These documents are D&W's instruments of service and as such remain the property of D&W subject to statutory rights. Use of these documents without D&W's express, written permission will result in copyright infringement.

SCHEMATIC DESIGN

REVISION:	Date:

DATE:	SCALE:
11/21/2015	As indicated
DRAWN BY: MLP	CHK'D BY: Checker

SHEET TITLE: FIRST FLOOR PLAN - POWER

SHEET #: E201

11/20/2015 2:31:44 PM C:\Users\Mike_Phillips\Documents\MEP - 690 - WESTFORD FIRE STATION_MLPhillips.rvt

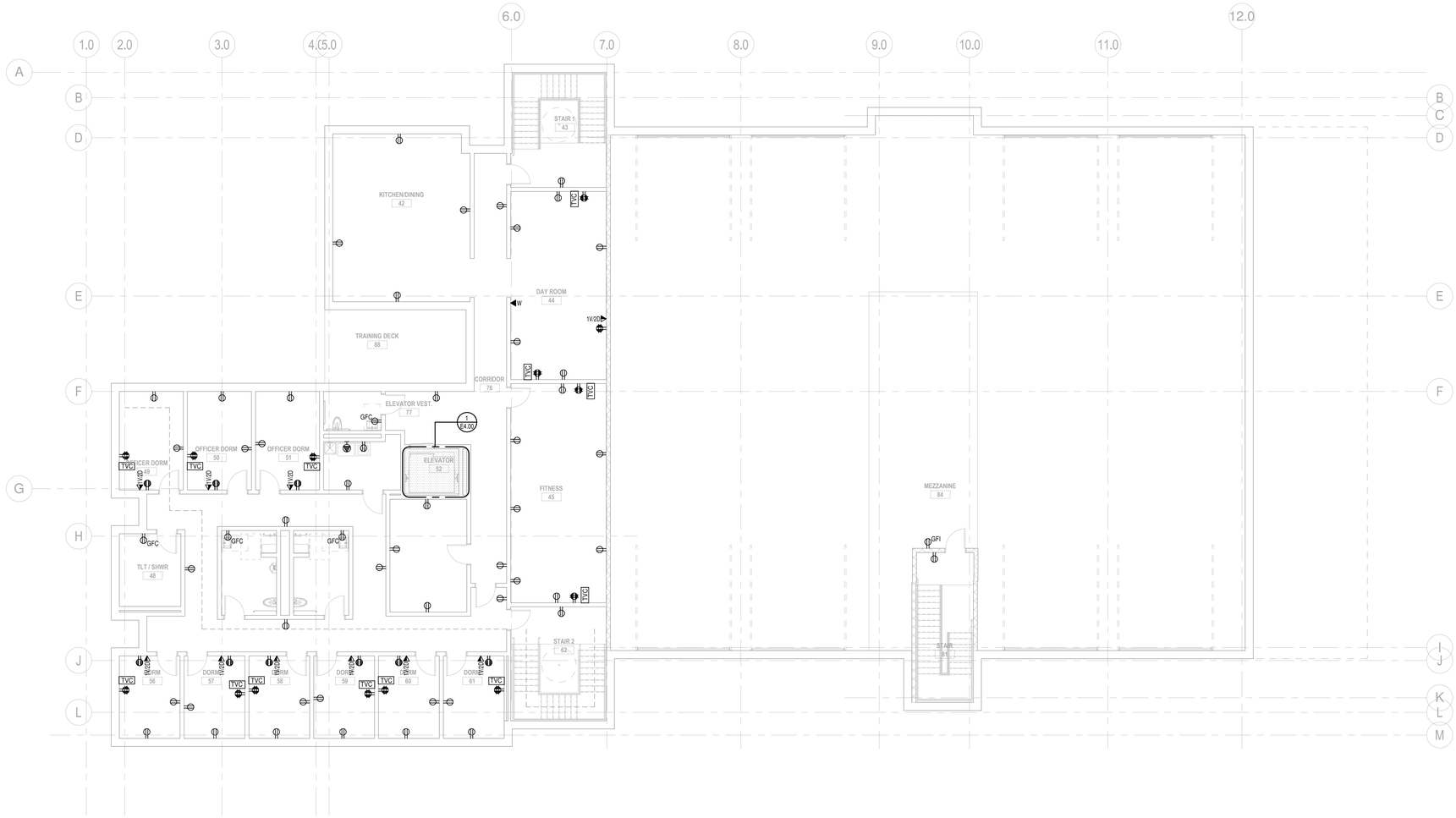

1 SECOND FLOOR PLAN - POWER
1/8" = 1'-0"

GENERAL POWER NOTES:

1. COORDINATE EXACT LOCATION OF ALL DEVICES AND EQUIPMENT WITH ARCHITECT PRIOR TO INSTALLATION.
2. REFER TO MECHANICAL PLANS FOR ANY CHANGES AND FOR EXACT LOCATION OF ALL HVAC EQUIPMENT.
3. WIRING IS SHOWN ON DRAWINGS ONLY FOR SPECIFIC ROUTES OR SPECIAL CONDITIONS.
4. WIRING AND CONDUIT SHALL BE REQUIRED BETWEEN ALL OUTLETS INDICATED WITH CIRCUIT NUMBERS AND PANEL DESIGNATIONS.
5. ALTHOUGH ALL BRANCH CIRCUIT WIRE AND CONDUIT IS NOT SHOWN, IT IS THE INTENT OF THESE DOCUMENTS THAT A COMPLETE BRANCH CIRCUIT WIRING SYSTEM BE INSTALLED.
6. ALL BRANCH CIRCUIT CONDUCTORS SHALL BE TYPE MC 98% CONDUCTIVITY, COPPER MINIMUM #12 AWG SIZE, THWN/THHN INSULATION, 600 VOLTS RATED UNLESS OTHERWISE NOTED.
7. REFER TO FIRE PROTECTION PLANS FOR ANY CHANGES AND FOR EXACT LOCATION OF ALL FLOW SWITCH, TAMPER SWITCH, ETC.
8. DO NOT PENETRATE STAIRS WITH ANY UTILITIES EXCEPT FOR UTILITIES SPECIFICALLY SERVING THAT STAIR.
9. WHERE CONDUITS AND/OR BOXES CANNOT BE FLUSH MOUNTED IN BUILDING PROVIDE A SYSTEM OF SURFACE METAL RACEWAYS AND BOXES IN ACCORDANCE WITH ARTICLE 386, EQUAL TO WIREMOLD FOR ALL FINISH SPACES WHERE PUBLIC HAS ACCESS, INCLUDING CORRIDORS, CLASSROOMS, OFFICES, ETC.
10. CONFIRM RATINGS & FINAL LOCATIONS OF EQUIPMENT WITH OWNER PRIOR TO ROUGHING.
11. ALL OUTLETS ON EXTERIOR WALLS WITH CASEWORK SHALL BE MOUNTED 6" ABOVE CASEWORK. CONFIRM HEIGHT OF CASEWORK WITH HVAC AND ARCHITECT PRIOR TO ROUGHING.
12. TYPICALLY PROVIDE GROUND FAULT INTERRUPTER TYPE RECEPTACLES WITHIN 6 FEET OF WATER SOURCES.
13. PROVIDE ALL EMPTY CONDUITS WITH PULL-STRINGS.
14. TYPICALLY PROVIDE (2) 4" SLEEVES OVER EACH CORRIDOR DOOR.
15. ROVIDE (2) 2" THROUGH-WALL SLEEVE ABOVE CEILING OVER THE DOORS INTO EACH ROOM LEADING FROM THE CORRIDOR FOR COMMUNICATIONS/DATA WIRING.
16. LOCATE ALL WALL TELEPHONE OUTLETS 12 INCHES AWAY FROM ALL OTHER OUTLETS/DEVICES.
17. PROVIDE (2) 1" SLEEVES OVER EACH DOOR FOR TEL./DATA SECURITY AND SOUND SYSTEM WIRING. TEL./DATA SHALL BE DEDICATED TO (1) OF THE CONDUITS.
18. ELECTRICAL CONTRACTOR SHALL PROVIDE ALL BOXES AND CONDUITS REQUIRED FOR AUDIO/VISUAL SYSTEMS SECTION 274100 DEVICES AS SHOWN ON AV DRAWINGS. ALL LOCATIONS OF POWER AND A/V OUTLET BOXES SHALL BE COORDINATED WITH ARCHITECT PRIOR TO ROUGHING.

LIGHTNING PROTECTION NOTES:

1. THE LIGHTNING PROTECTION SYSTEM AS SHOWN ON DRAWING HAS BEEN DESIGNED IN ACCORDANCE WITH UL96A & NFPA-780 LIGHTNING PROTECTION SYSTEM STANDARDS.
2. CONDUCTORS SHALL MAINTAIN A HORIZONTAL OR DOWNWARD COURSE, FREE FROM "U" OR "V" (DOWN AND UP) POCKETS.
3. NO BEND OF CONDUCTOR SHALL FORM AN ANGLE OF LESS THAN 90° NOR SHALL HAVE A RADIUS OF BEND LESS THAN 8".
4. AIR TERMINALS SHALL BE SPACED EVERY 20'-0" MAXIMUM AROUND THE ROOF PERIMETER AND/OR ALONG ROOF RIDGES. AIR TERMINALS SHALL BE LOCATED WITHIN 2'-0" OF OUTSIDE CORNERS.
5. AIR TERMINALS SHALL BE SPACED EVERY 50'-0" MAXIMUM IN CENTER ROOF AREAS.
6. ACTUAL JOBSITE CONDITIONS MAY REQUIRE SLIGHT ALTERATIONS IN AIR TERMINAL DOWN CONDUCTOR AND GROUND ROD LOCATIONS.
7. BARE COPPER MATERIALS SHALL NOT BE INSTALLED ON ALUMINUM OR GALVALUM SURFACES, AND ALUMINUM MATERIALS SHALL NOT BE INSTALLED ON COPPER SURFACES.
8. ALL LIGHTNING PROTECTION CONDUCTORS SHALL BE FASTENED EVERY 3'-0" MAX.
9. ALL BOLTS ON BOLT-PRESSURE CONNECTORS SHALL BE TORQUED AT 150 POUND-INCHES.
10. ALL CONNECTIONS MUST BE USED WITH UL LISTED CABLE OF SAME METAL TYPE.
11. SMALL METALLIC BODIES OF INDUCTANCE SITUATED WITHIN 6'-0" OF A LIGHTNING CONDUCTOR OR ANOTHER BONDED METAL BODY SHALL BE INTERCONNECTED TO THE LIGHTNING CONDUCTOR SYSTEM. UNLESS INHERENTLY GROUNDED.
12. ALL LARGE METAL BODIES SHALL BE BONDED TO THE MAIN LIGHTNING PROTECTION CONDUCTOR. (I.E.; EXHAUST FANS, ROOF VENTS, METAL COOLING TOWERS, HVAC UNITS, LADDERS, RAILINGS, ANTENNAS, SKYLIGHTS, METAL STACKS AND ANY OTHER LARGE METAL BODY WHOSE HEIGHT EXCEEDS THAT OF THE AIR TERMINAL IN USE, UNLESS PROTECTED BY HIGHER ROOF ELEVATIONS).
13. CONNECTIONS TO GROUND RODS SHALL BE MADE AT A POINT NOT LESS THAN 1'-0" BELOW FINISHED GRADE AND 2'-0" AWAY FROM FOUNDATION WALL.
14. BOND TO WATERLINES (DOMESTIC & FIRE).
15. A LIGHTNING ARRESTOR, PROTECTOR OR ANTENNA DISCHARGE UNIT SHALL BE INSTALLED ON EACH ELECTRIC AND TELEPHONE SERVICE AND RADIO AND TELEVISION ANTENNA LEAD-IN BY THE ELECTRICAL CONTRACTOR, IN ACCORDANCE WITH NFPA-70.
16. TRANSIENT VOLTAGE SURGE SUPPRESSION (TVSS) OF SERVICES SHALL BE PROVIDED BY THE ELECTRICAL CONTRACTOR. (I.E. COMPUTERS, COPIERS, TELEPHONE, ETC.).
17. PROVIDE CERTIFICATION (UL, ARL OR EQUAL) UPON COMPLETION OF INSTALLATION.

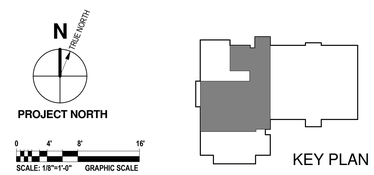

GARCIA GALUSKA DESOUSA
CONSULTING ENGINEERS
37 Stillwater Avenue, Bangor, ME 04401
207 989 5700 FAX 207 989 0883 E-MAIL info@g-g-d.com
Bangor, ME 04401 Lewiston, ME 02740
Portland, ME 04101 Manchester, NH 03101

ARCHITECTS • PROJECT MANAGERS
DORE & WHITTIER ARCHITECTS, INC.
Burlington, VT 05401
T : 802 863 1458
F : 802 863 1435
Northampton, MA 01060
260 Meadow Street, Bldg 7
T : 413 586 0860
F : 413 586 0880
Northampton, MA 01060
260 Meadow Street, Bldg 7
T : 978 499 1919
F : 978 499 1944
www.doreandwhittier.com

Project No.
14-690

WESTFORD FIRE STATION

65 Boston Road
Westford, MA 01886

COPYRIGHT © 2014 by Dore & Whitter Architects Inc. (D&W). These documents are D&W's instruments of service and as such D&W retains all copyrights, ownership rights and statutory rights. Use of these documents without D&W's express, written permission will result in copyright infringement.

SCHEMATIC DESIGN

REVISION:	Date:

DATE: 11/21/2015	SCALE: As indicated
DRAWN BY: MLP	CHK'D BY: Checker

SHEET TITLE:
SECOND FLOOR PLAN - POWER

SHEET #:
E202

11/20/2015 2:31:44 PM C:\Users\Mike_Phillips\Documents\MEP - 690 - WESTFORD FIRE STATION_MLPhillips.rvt

SERVICE: 120/208V,3PHASE,4W
AIC: 22,000 ARMS

PANEL SCHEDULE

	PANEL NO.	LOCATION	MTG	MAIN BUS AMPS	MAIN CB	BRANCH CKT BREAKER (AMPS) 1 POLE 15	1 POLE 20	1 POLE 30	2 POLE 20	2 POLE 30	2 POLE 50	3 POLE 20	3 POLE 30	3 POLE 40	3 POLE 50	3 POLE 60	3 POLE 70	TOTAL POLES	OTHERS
7 2 1	PP	ELECTRIC ROOM	S	225	-	-	79	5	2	1	-	-	-	-	-	-	-	120	3
1 5 6	MP	ELECTRIC ROOM	S	400	-	-	65	-	6	3	-	14	2	4	-	2	-	168	(2) 15/3
4 1	LP	ELECTRIC ROOM	S	REFER TO AUTOMATED LIGHTING SYSTEM PANEL SCHEDULE "LP"														42	
4 1	ELP	EMERGENCY ROOM	S	REFER TO AUTOMATED LIGHTING SYSTEM PANEL SCHEDULE "ELP"														30	

1. FED FROM CURRENT LIMITING BREAKERS. UL LISTED SERIES RATED FOR 42,000A RMS@ RATED VOLTAGE WITH UPSTREAM BREAKERS IS ACCEPTABLE.
2. DOUBLE NEUTRAL
3. PROVIDE (10) 20A/1P ARC FAULT CIRCUIT BREAKERS FOR DORM ROOMS.
4. ALCS PANEL WITH INTEGRAL RELAYS AND NETWORKED CONTROLLER; REFER TO "AUTOMATED LIGHTING CONTROL SYSTEM ONE-LINE DIAGRAM".
5. PROVIDE (2) 84 POLE SINGLE TUB PANEL BOARDS.
6. PROVIDE (2) 20A-1P GFCI TYPE CIRCUIT BREAKERS (ONE TO SERVE FIRE POLE)
7. PROVIDE (2) 60 POLE SINGLE TUB PANEL BOARDS.

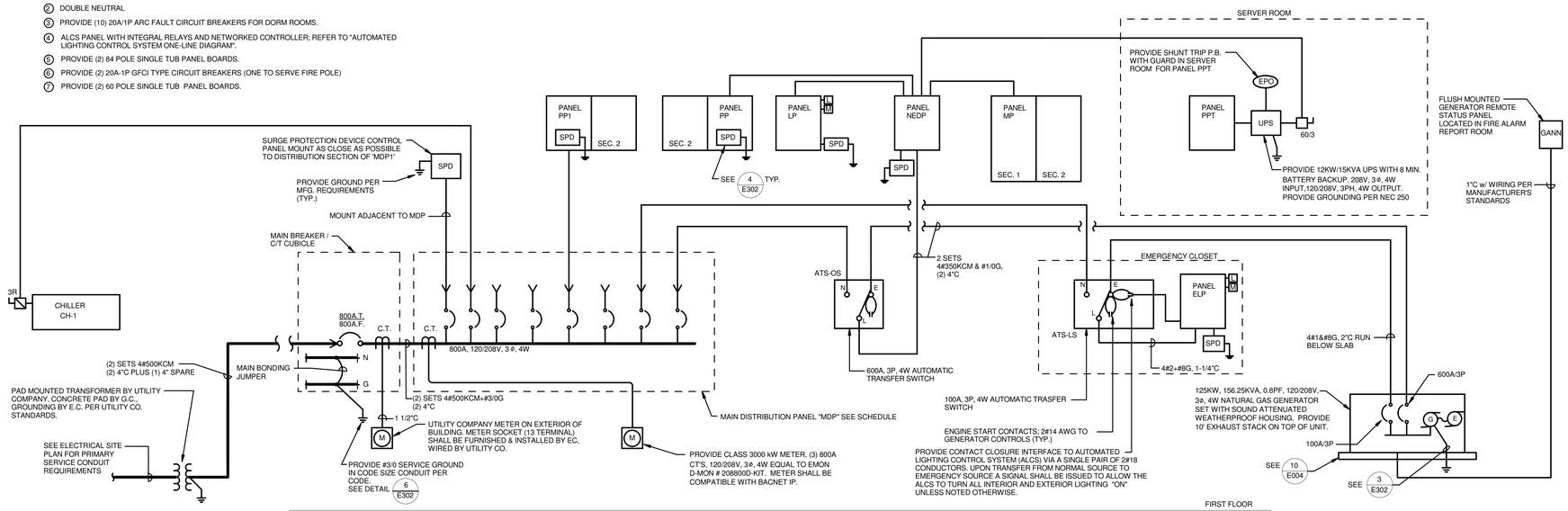

1 / E301 ONE LINE RISER DIAGRAM - POWER

SCALE : N.T.S.

800 AMP, 120/208 V, 3 ø, 4W, MLO
AIC: 42,000 ARMS

MAIN DISTRIBUTION PANEL "MDP" SCHEDULE

	OVER CURRENT DEVICES No.	TRIP	FRAME	CIRCUIT	FEEDER SIZE	COND. SIZE	REMARKS
	-	-	-	-	-	-	-
	1	60	100	SPD	4#6&#6G	1 1/4"	-
	2	300	400	CHILLER CH-1	4#350KCMIL+#4G	3"	-
	3	200	225	ELEVATOR	3#3/0&#6G	2"	-
1	4	100	100	ATS-LS (ELP)	4#2+#8G	1 1/4"	-
	5	600	600	ATS-OS (NEDP)	2 SETS 4#350KCM+#1G	(2) 4"	-
	6	200	225	SPARE	-	-	-
	7	100	100	SPARE	-	-	-
	8	-	225	SPACE PROVSIONS	-	-	-
	9						
	10						

1. PROVIDE CURRENT LIMITING BREAKERS

SERVICE: 800AMP, 120/208 V, 3 ø, 4W, MLO
AIC: 42,000A RMS

DISTRIBUTION PANEL 'NEDP' SCHEDULE

	OVER CURRENT DEVICES No.	TRIP	FRAME	CIRCUIT	FEEDER SIZE	COND. SIZE	REMARKS
1	1	250	400	MP	4#250KCM+#3G	3"	(1)30A/3P
1	2	200	225	PP	5#3/0+#6G	2 1/2"	-
1	3	150	225	LP	4#1/0&#6G	2"	-
	4	100	100	SPARE	-	-	-
	5	-	100	SPACE PROVISIONS	-	-	-
	6	60	100	SURGE PROTECTION DEVICE	4#6+#6G	1-1/4"	-
	7	-	225	SPACE PROVISIONS	-	-	-
	8	200	225	SPARE	-	-	-
	9	50	100	WELDER	3#6&#10G	1"	-
	10	50	100	WELDER	3#6&#10G	1"	-
	11	50/2	100	DISHWASHER	3#6&#10G	1"	-
	12	60	100	AIR COMPRESSOR	3#6&#10G	1"	-
	13	-	100	SPACE PROVISIONS	-	-	-
	14	-	100	SPACE PROVISIONS	-	-	-

1. PROVIDE CURRENT LIMITING BREAKERS. UL LISTED SERIES RATED FOR 42,000A RMS@ RATED VOLTAGE WITH DOWNSTREAM BREAKERS IS ACCEPTABLE.

GARCIA GALUSKA DESOUSA
CONSULTING ENGINEERS
375 Totten Pond Road, Waltham, MA 02451
508 - 998 - 5700 FAX 508 - 998 - 0983 E - MAIL info@g - g - d .com

ARCHITECTS • PROJECT MANAGERS
Brattleboro, VT 05401
P : 802 . 257 . 5141
F : 802 . 863 . 1435
Northampton, MA 01060
P : 413 . 586 . 8555
F : 413 . 586 . 8570
Newburyport, MA 01950
260 Merrimac Street, Bldg 7
Newburyport, MA 01950
P : 978 . 499 . 2040
F : 978 . 499 . 2944
www.dore-andwhitter.com
DORE & WHITTER ARCHITECTS, INC.

Project No. 14-690

WESTFORD FIRE STATION

65 Boston Road
Westford, MA 01886

COPYRIGHT © 2014 by Dore & Whitter Architects Inc. (D&W). These documents are D&W's instruments of service and as such are the property of D&W and are subject to copyright and statutory rights. Use of these documents without D&W's express, written permission will result in copyright infringement.

SCHEMATIC DESIGN

REVISION:	Date:

DATE: 11/21/2015
SCALE:
DRAWN BY: MLP
CHK'D BY: DMP

SHEET TITLE: ONE-LINE POWER RISER

SHEET #: E301

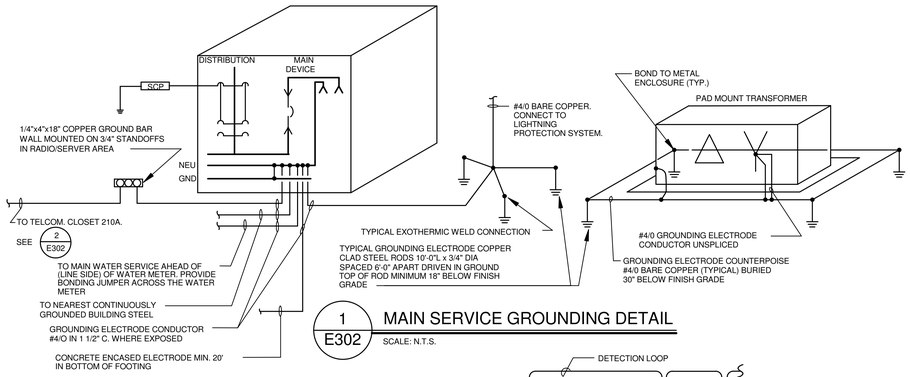

1 E302 MAIN SERVICE GROUNDING DETAIL

SCALE: N.T.S.

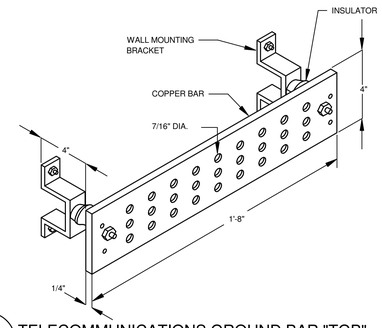

2 E302 TELECOMMUNICATIONS GROUND BAR "TGB"

SCALE: N.T.S.

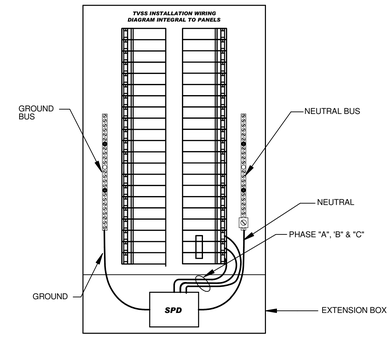

NOTES:

1. CONNECT SPD TO NEAREST 60A BREAKER IN PANEL.
2. LIMIT WIRE LENGTH TO 18" OR LESS, KEEP WIRE FREE OF ANY SHARP BENDS.
3. DIRECT CONNECTION TO PHASE BUS IS NOT PERMITTED.
4. EXTERNAL SPD IS ACCEPTABLE; PROVIDE WITH 60A/3P BREAKER. ALSO CONFIRM/COORDINATE MOUNTING SPACE FOR EXTERNAL SPD.

3 E302 SDP WIRING DIAGRAM

SCALE: N.T.S.

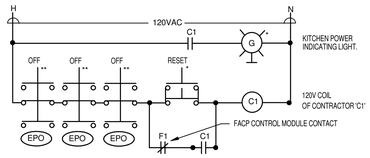

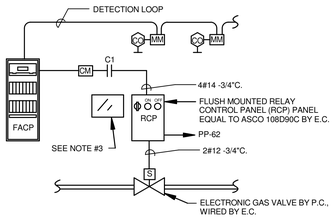

4A E302 CARBON MONOXIDE GAS SOLENOID SHUT DOWN DETAIL

SCALE: NTS

NOTES:

1. CARBON MONOXIDE (CO) DETECTORS SHALL BE PROGRAMMED AS SUPERVISORY POINTS IN THE FACP. UPON DETECTION OF CO, POWER SHALL BE INTERRUPTED TO THE (RCP) AND THE GAS SHUTOFF WILL CLOSE.
2. GAS FLOW MAY BE RESTARTED AFTER THE CO DETECTION AND THE FACP ARE RESET WHICH WILL RE-POWER THE (RCP). TURNING THE KEY SWITCH TO "ON" WILL ENERGIZE THE SOLENOID.
3. YELLOW ENGRAVED WARNING PLACARD, MOUNTED ADJACENT TO THE (RCP), WITH THE FOLLOWING "CAUTION- GAS FLOW IS RE-ESTABLISHED WHEN "ON" KEY SWITCH IS TURNED AND GAS VALVE IS MANUALLY RESET. RELIGHT ALL ASSOCIATED PILOTS IMMEDIATELY UPON RESET. CO DETECTORS AND THE FIRE ALARM SYSTEM CONTROL PANEL MUST CLEAR OF ANY CO ALARMS PRIOR TO RESET".

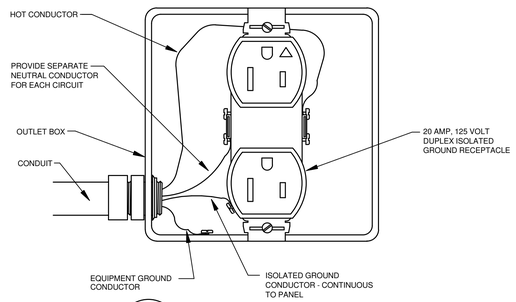

6 E302 I.G. RECEPTACLE DETAIL

SCALE: N.T.S.

NOTE:
MAXIMUM OF (2) I.G. RECEPTACLES OR (1) QUADRUPLEX I.G. RECEPTACLES PER CIRCUIT

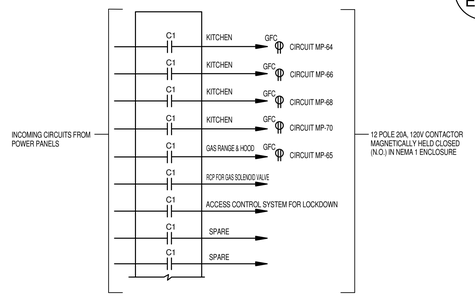

* LOCATE MANUAL/RESET PUSH BUTTON (MOMENTARY TYPE) FOR GAS SOLENOID ADJACENT TO APPLIANCE. COORDINATE EXACT LOCATION WITH OWNER.

** LOCATE "OFF PUSH BUTTON IN KITCHEN. COORDINATE EXACT LOCATION WITH OWNER.

4 E302 KITCHEN EQUIPMENT EMERGENCY POWER OFF WIRING DIAGRAM

SCALE: NTS

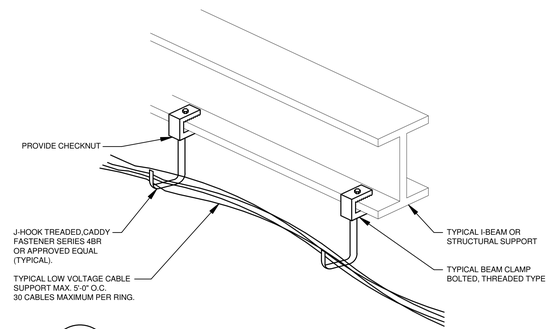

9 E302 TYPICAL LOW VOLTAGE CABLE SUPPORT DETAIL

SCALE: N.T.S.

NOTES:

1. SUPPORTING CABLE IS ACCEPTABLE BELOW SUPPORT STEEL OR ABOVE STEEL. COORDINATE MOUNTING LOCATIONS WITH OTHER TRADES AND FIELD CONDITIONS. PROVIDE SUPPORT CLIPS AND THREADED RODS AS REQUIRED FOR A COMPLETE SUPPORT SYSTEM AS INDICATED.
2. SUPPORT CABLE EITHER PARALLEL OR PERPENDICULAR TO SUPPORT STEEL.

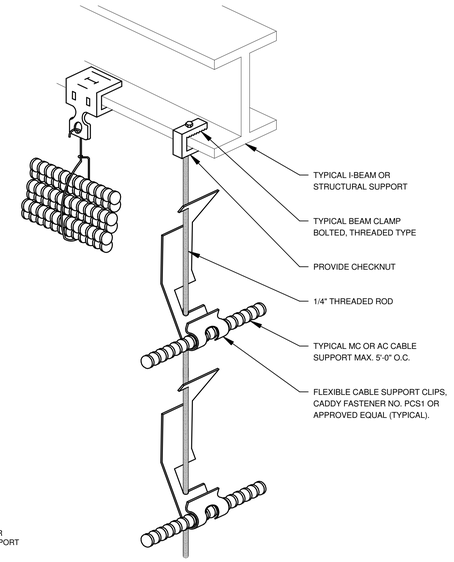

NOTES:

1. SUPPORTING CABLE IS ACCEPTABLE BELOW SUPPORT STEEL OR ABOVE STEEL. COORDINATE MOUNTING LOCATIONS WITH OTHER TRADES AND FIELD CONDITIONS. PROVIDE SUPPORT CLIPS AND THREADED RODES AS REQUIRED FOR A COMPLETE SUPPORT SYSTEM AS INDICATED.
2. SUPPORT CABLES FROM EITHER PARALLEL OR PERPENDICULAR SUPPORT STEEL.
3. BUNDLE A UP TO A MAXIMUM OF (6) SIX CABLES.

10 E302 TYPICAL MC CABLE SUPPORTING DETAIL

SCALE: N.T.S.

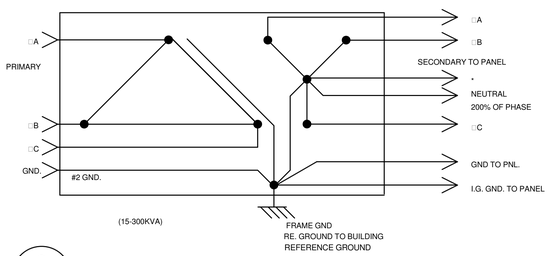

8 E302 TRANSFORMER CONNECTIONS WIRING DETAIL

N.T.S.

* NEUTRAL CONNECTORS #1/0 OR LARGER MAY BE PARALLELLED

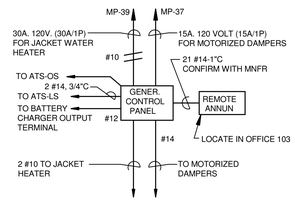

5 E302 TYPICAL EMERGENCY GENERATOR CONTROL WIRING

SCALE: N.T.S.

(NOTE: MAY VARY BY MANUFACTURER)

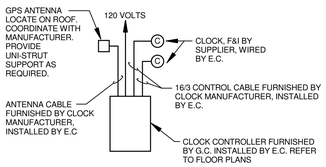

7 E302 CLOCK DETAIL

N.T.S.

GARCIA GALUSKA DESOUSA
CONSULTING ENGINEERS
375 Totten Pond Road, Waltham, MA 02451
508 . 998 . 5700 FAX 508 . 998 . 0883 E - MAIL mail@g - g - d . com

ARCHITECTS • PROJECT MANAGERS
DORE & WHITTIER ARCHITECTS, INC.
Burlington, VT 05401
1 1 1 Pine Street, Suite 1
P : 8 0 2 . 8 6 3 . 1 4 3 5
F : 8 0 2 . 8 6 3 . 1 4 3 6
Northampton, MA 01060
260 Merrimac Street, Bldg 7
P : 9 7 8 . 5 8 4 . 7 5 0 0
F : 9 7 8 . 4 9 9 . 1 2 9 4
www.doreandwhittier.com

Project No. 14-690

WESTFORD FIRE STATION

65 Boston Road
Westford, MA 01886

COPYRIGHT © 2014 by Dore & Whitter Architects Inc. (D&W). These documents are D&W's instruments of service and as such D&W retains all copyrights, common law and statutory rights. Use of these documents without D&W's express, written permission will result in copyright infringement.

SCHEMATIC DESIGN

REVISION:	Date:

DATE: 11/21/2015
SCALE:
DRAWN BY: MLP
CHK'D BY: Checker

SHEET TITLE: ELECTRICAL DETAILS

SHEET #: E302

SCHEDULE OF MECHANICAL EQUIPMENT

UNIT NO.	DESCRIPTION	LOCATION	LOAD CHARACTERISTICS	VOLT	PH	PANEL CIRCUIT	CIRCUIT BREAKER	FEEDER	TS	⊠	⧄	□	~●	S D	WP	CO D	J	S WP J	VFD	REMARKS	KEY NOTES
									EQUIPMENT AND CONNCECTIONS												
AHU-1	AIR HANDLING UNIT	-	-	-	-	-	-	-			X		X	(2) X	X		X	X		-	(3)
B-1	BOILER	BOILER ROOM	-	-	-	-	-	-	X				X				X				
B-2	BOILER	BOILER ROOM	-	-	-	-	-	-	X				X				X				
BP-1	B-1 CIRC.	BOILER ROOM	-	-	-	-	-	-			X		X				X		X		
BP-2	B-2 CIRC.	BOILER ROOM	-	-	-	-	-	-			X		X				X		X		
CP-1	CONDENSATE PUMP	-	-	-	-	-	-	-	X				X				X			-	(6)
CH-1	CHILLER	-	-	-	-	-	-	-													
DCUe-1	DUCTLESS COOLING UNIT (INDOOR)	-	-	-	-	-	-	-			X		X				X			-	(1)(2)
DCUc-1	DUCTLESS COOLING UNIT (OUTDOOR)	-	-	-	-	-	-	-			X		X		X		X			-	
DCUe-2	DUCTLESS COOLING UNIT (INDOOR)	-	-	-	-	-	-	-			X		X				X			-	(1)(2)(8)
DCUe-3	DUCTLESS COOLING UNIT (INDOOR)	-	-	-	-	-	-	-			X		X				X			-	(1)(2)(8)
DCUc-2-3	DUCTLESS COOLING UNIT (OUTDOOR)	-	-	-	-	-	-	-			X		X		X		X			-	(8)
DCUe-4	DUCTLESS COOLING UNIT (INDOOR)	-	-	-	-	-	-	-			X		X				X			-	(1)(2)(8)
DCUc-4	DUCTLESS COOLING UNIT (OUTDOOR)	-	-	-	-	-	-	-			X		X		X		X			-	(8)
DCUe-5	DUCTLESS COOLING UNIT (INDOOR)	-	-	-	-	-	-	-			X		X				X			-	(1)(2)(8)
DCUc-5	DUCTLESS COOLING UNIT (OUTDOOR)	-	-	-	-	-	-	-			X		X		X		X			-	(8)
DCUe-6	DUCTLESS COOLING UNIT (INDOOR)	-	-	-	-	-	-	-			X		X				X			-	(1)(2)(8)
DCUc-6	DUCTLESS COOLING UNIT (OUTDOOR)	-	-	-	-	-	-	-			X		X		X		X			-	(8)
DCUe-7	DUCTLESS COOLING UNIT (INDOOR)	-	-	-	-	-	-	-			X		X				X			-	(1)(2)
DCUc-7	DUCTLESS COOLING UNIT (OUTDOOR)	-	-	-	-	-	-	-			X		X		X		X			-	
EF-1	EXHAUST FAN	-	-	-	-	-			X				X				X				
EF-2	EXHAUST FAN	-	-	-	-	-	-	-	X				X				X				
EF-3	EXHAUST FAN	-	-	-	-	-	-	-	X	X	X		X				X				
EF-4	EXHAUST FAN	-	-	-	-	-	-	-	X	X	X		X				X				
EF-5	EXHAUST FAN	-	-	-	-	-	-	-	X				X				X				
EF-6	EXHAUST FAN	-	-	-	-	-	-	-	X				X				X				
EF-7	EXHAUST FAN	-	-	-	-	-	-	-	X				X				X				
EF-8	EXHAUST FAN	-	-	-	-	-	-	-	X				X				X				
EF-9	EXHAUST FAN	-	-	-	-	-	-	-	X				X				X				
EF-10	EXHAUST FAN	-	-	-	-	-	-	-	X	X	X		X				X				
EF-11	EXHAUST FAN	-	-	-	-	-	-	-		X	X		X				X				
EF-12	EXHAUST FAN	-	-	-	-	-	-	-	X	X	X		X				X				
EF-13	EXHAUST FAN	-	-	-	-	-	-	-	X				X				X			-	
EF-14	EXHAUST FAN	-	-	-	-	-	-	-	X				X				X			-	
EF-15	EXHAUST FAN	-	-	-	-	-	-	-	X				X				X				
EF-16	EXHAUST FAN	-	-	-	-	-	-	-	X				X				X				
EF-17	EXHAUST FAN	-	-	-	-	-	-	-	X				X				X				
EF-18	EXHAUST FAN	-	-	-	-	-	-	-	X		X		X				X		X		
KEF-8	EXHAUST FAN	-	-	-	-	-	-	-			X		X				X		X		
ERV-1	ENERGY RECOVERY	-	-	-	-	-	-	-			X		X	X	X		X	X	X	-	
ERV-1	ENERGY RECOVERY	-	-	-	-	-	-	-			X		X	X	X		X	X		-	
EUH-1	ELEC. UNIT HEATER	-	-	-	-	-	-	-			X		X				X				
EUH-2	ELEC. UNIT HEATER	-	-	-	-	-	-	-			X		X				X				
EUH-3	ELEC. UNIT HEATER	-	-	-	-	-	-	-			X		X				X				
FC-1	FAN COIL	-	-	-	-	-	-	-	X				X				X				
FC-2	FAN COIL	-	-	-	-	-	-	-	X				X				X				
FC-3	FAN COIL	-	-	-	-	-	-	-	X				X				X				
FC-4	FAN COIL	-	-	-	-	-	-	-	X				X				X				
GP-1	GYCOL PUMP	-	-	-	-	-	-	-							X						
IU-1 THRU IU-48	INDUCTION UNITS	-	-	-	-	-	-	-	X				X				X			-	(4)
P-1	PUMP HHW PRIMARY	-	-	-	-	-	-	-			X		X				X		X		
P-2	PUMP HHW STAND-BY	-	-	-	-	-	-	-			X		X				X		X		
P-3	PUMP CHW PRIMARY	-	-	-	-	-	-	-			X		X				X		X		
P-4	PUMP CHW STAND-BY	-	-	-	-	-	-	-			X		X				X		X		
P-5	PUMP COMP CHW PRIMARY	-	-	-	-	-	-	-			X		X				X		X		
P-6	PUMP COMP CHW STAND-BY	-	-	-	-	-	-	-			X		X				X		X		
RFM-1	RADIANT FLOOR MANIFOLD	-	-	-	-	-	-	-	X				X				X			-	
RFM-2	RADIANT FLOOR MANIFOLD	-	-	-	-	-	-	-	X				X				X			-	
RFM-CP	CONTROL PANEL	-	-	-	-	-	-	-					X				X			-	
UH-1	UNIT HEATER	-	-	-	-	-	-	-	X				X				X				
UH-2	UNIT HEATER	-	-	-	-	-	-	-	X				X				X				
UH-3	UNIT HEATER	-	-	-	-	-	-	-	X				X				X				
UH-4	UNIT HEATER	-	-	-	-	-	-	-	X				X				X				
UH-5	UNIT HEATER	-	-	-	-	-	-	-	X				X				X			-	
UH-6	UNIT HEATER	-	-	-	-	-	-	-	X				X				X			-	
UH-7	UNIT HEATER	-	-	-	-	-	-	-	X				X				X				
UH-8	UNIT HEATER	-	-	-	-	-	-	-	X				X				X			-	
UH-9	UNIT HEATER	-	-	-	-	-	-	-	X				X				X				
UH-10	UNIT HEATER	-	-	-	-	-	-	-	X				X				X				
UH-11	UNIT HEATER	-	-	-	-	-	-	-	X				X				X				
VAV-1	VAV BOX	-	-	-	-	-	-	-	X				X				X			-	(5)
VAV-2	VAV BOX	-	-	-	-	-	-	-	X				X				X			-	(5)
VAV-3	VAV BOX	-	-	-	-	-	-	-	X				X				X			-	(5)
VAV-4	VAV BOX	-	-	-	-	-	-	-	X				X				X			-	(5)
VAV-5	VAV BOX	-	-	-	-	-	-	-	X				X				X			-	(5)
AC-3	AIR COMPRESSOR	-	-	-	-	-	-	-			X		X				X				(7)
AC-4	AIR COMPRESSOR	-	-	-	-	-	-	-			X		X				X				(7)

SCHEDULE OF PLUMBING & FIRE PROTECTION EQUIPMENT

UNIT NO.	DESCRIPTION	LOCATION	LOAD CHARACTERISTICS	VOLT	PH	PANEL CIRCUIT	CIRCUIT BREAKER	FEEDER	TS	⊠	⧄	□	~●	S D	WP	J	REMARKS	KEY NOTES
									EQUIPMENT AND CONNCECTIONS									
BP-1	BOOSTER PUMP	PLATFORM	-	-	-	-	-	-			X		X			X	-	
			-	-	-	-	-	-	X				X			X	-	
WH-1	WATER HEATER	-	-	-	-	-	-	-	X				X			X		
RP-1	RE-CIRC PUMP	-	-	-	-	-	-	-	X				X			X		(1)(2)
RP-2	RE-CIRC PUMP	-	-	-	-	-	-	-	X				X			X		(1)(2)
SV-1	GAS SOLENOID VALVE	-	-	-	-								X			X	-	
SV-2	GAS SOLENOID VALVE	-	-	-	-	-	-	-	X				X			X		
SV-3	GAS SOLENOID VALVE	-	-	-	-	-	-	-	X				X			X		
SV-4	GAS SOLENOID VALVE	-	-	-	-	-	-	-	X				X			X		
SV-5	GAS SOLENOID VALVE	-	-	-	-	-	-	-	X				X			X		
SV-6	GAS SOLENOID VALVE	-	-	-	-	-	-	-	X				X			X		
SV-7	GAS SOLENOID VALVE	-	-	-	-	-	-	-	X				X			X		
SV-8	GAS SOLENOID VALVE	-	-	-	-	-	-	-	X				X			X		
SV-9	GAS SOLENOID VALVE	-	-	-	-	-	-	-	X				X			X		
SV-10	GAS SOLENOID VALVE	-	-	-	-	-	-	-	X				X			X		
SV-11	GAS SOLENOID VALVE	-	-	-	-	-	-	-	X				X			X		
SV-12	GAS SOLENOID VALVE	-	-	-	-	-	-	-	X				X			X		
SV-13	GAS SOLENOID VALVE	-	-	-	-	-	-	-	X				X			X		
FT	FLUSH VALVE TRASFORMER	-	-	-	-	-	-	-					X			X	-	
P-10	GARBAGE DISPOSAL	-	-	-	-	-	-	-					X			X	-	
TT-1	TIGHT TANK CONTROL PANEL	-	-	-	-	-	-	-					X			X	-	(3)
TT-2	TIGHT TANK CONTROL PANEL	-	-	-	-	-	-	-					X			X	-	(3)
AC-1	AIR COMPRESSOR FOR PREACTION SYSTEM	-	-	-	-	-	-	-	X				X			X		
AC-2	AIR COMPRESSOR FOR PREACTION SYSTEM	-	-	-	-	-	-	-	X				X			X		

PLUMBING SCHEDULE KEY NOTES:

(1) PUMP WILL RUN VIA DDC (BUILDING MANAGEMENT SYSTEM) SYSTEM.

(2) AQUASTAT FURNISHED AND INSTALLED BY PC, 120V CONNECTION BY EC.

(3) PROVIDE 1"C FROM CONTROL PANEL TO TIGHT TANK, REFER TO PLUMBING DRAWINGS FOR LOCATIONS OF TIGHT TANKS.

MECHANICAL SCHEDULE GENERAL NOTES:

1. DUCT SMOKE DETECTORS SHALL BE PROVIDED ON SUPPLY DUCT FOR ALL MECHANICAL UNITS OVER 2000CFM. PROVIDE DUCT SMOKE ON RETURN AND SUPPLY DUCTWORK FOR ALL MECHANICAL UNITS OVER 15000 CFM. PROVIDE REMOTE TEST STATION WITH EACH DETECTOR. LOCATION OF TEST STATION SHALL BE ADJACENT TO THE FACP. DUCT SMOKES TO INITIATE ALARM.
2. PROVIDE FLEXIBLE CONNECTION TO EQUIPMENT REFER TO SPECIFICATIONS.
3. CONTROLLERS AND DISCONNECT DEVICES SHALL BE NRTL RATED FOR USE WITH A DESIGN E MOTOR WITH A HORSE POWER RATING NOT LESS THAN 1.4 TIMES THE MOTOR HORSE POWER. (REFER TO ELECTRICAL CODE ARTICLE 430).
4. TWO SPEED MOTORS SHALL HAVE TWO MOTOR BRANCH CIRCUITS AND SIX POLE DISCONNECTS.
5. WHERE INDICATED PROVIDE WEATHERPROOF DUPLEX RECEPTACLES AT MECHANICAL EQUIPMENT. PROVIDE 3/4"C. WITH 2#12+#12G AWG TO NEAREST PANEL AND CONNECT TO 20A/1P CIRCUIT BREAKER UNLESS OTHERWISE INDICATED.
6. TYPICALLY LOCATE STARTERS IN ELECTRIC ROOM (NEAR PANEL).
7. ALL EXTERIOR MOUNTED DISCONNECT SWITCHES, JUNCTION/PULL BOXES, RACEWAYS, FLEXIBLE CONNECTION TO EQUIPMENT, ETC. SHALL BE NEMA "3R."
8. THE E.C. SHALL PROVIDE NEMA 7 DISCONNECT SWITCHES AND SEAL FITTINGS AT EXPLOSION PROOF FANS.
9. WHERE INDICATED PROVIDE 120 VOLT CIRCUIT FOR RECEPTACLE AND LIGHT FIXTURE TYPE "J" AT ROOF TOP UNIT AS NOTED. TYPICALLY CONNECT TO NEAREST 120 VOLT RECEPTACLE CIRCUIT UNLESS OTHERWISE INDICATED.
10. REFER TO MECHANICAL DRAWINGS FOR LOCATIONS OF DUCT TYPE SMOKE DETECTORS.
11. PROVIDE WEATHERPROOF DUPLEX RECEPTACLES AT MECHANICAL EQUIPMENT. PROVIDE 3/4"C. WITH 2#12+#12G AWG TO NEAREST PANEL AND CONNECT TO 20A/1P CIRCUIT BREAKER UNLESS OTHERWISE INDICATED.

MECHANICAL SCHEDULE KEY NOTES:

(1) PROVIDE 3/4"CONDUIT W/PULL WIRE BETWEEN INDOOR UNIT & OUTDOOR UNIT FOR EACH SPLIT SYSTEM.

(2) PROVIDE HARD CONNECTION FOR CONDENSATE PUMP (CP-1). CONNECT TO NEAREST 120V, 1ϕ BRANCH CIRCUIT UNLESS OTHERWISE INDICATED. PROVIDE THERMAL SWITCH AT UNIT. FIELD COORDINATE EXACT LOCATION WITH HVAC.
SEE DETAIL 1/E303

(3) VFD FURNISHED INTEGRAL WITH UNIT BY HVAC EQUIPMENT SUPPLIER. SINGLE POINT CONNECTION BY E.C.

(4) PROVIDE HARD CONNECTION FOR CONDENSATE PUMP (CP) FOR INDUCTION UNITS IU-X THRU IU-X, XX TOTAL. CONNECT TO NEAREST 120V, 1 ϕ BRANCH CIRCUIT. PROVIDE THERMAL SWITCH AT UNIT. REFER TO MECHANICAL DRAWINGS FOR INDUCTION UNIT LOCATIONS. CONNECT TO NORMAL/EMERGENCY CIRCUIT WHEN SERVING UNIT THAT IS CONNECTED TO NORMAL/EMERGENCY.
SEE DETAIL 1/E303

(5) FINAL VAV BOX CONNECTION BY ATC CONTRACTOR. ALSO REFER TO MECHANICAL DRAWINGS FOR UNIT EXACT LOCATIONS AND QUANTITIES. COORDINATE WITH HVAC CONTRACTOR FOR EXACT LOCATION OF JUNCTION BOXES.

(6) REFER TO MECHANICAL DRAWINGS FOR EXACT LOCATION OF CONDENSATE PUMPS CP-1.

(7) EQUIPMENT FURNISHED AND INSTALLED BY G.C., WIRED BY E.C.

(8) ALL BRANCH CIRCUIT WIRING INSTALLED OUTSIDE DISPATCH AREA ROOM 178, SERVER ROOM 219 (MDF), RADIO ROOM 175 AND EOC ROOM 171 AND WATCH ROOM 108 THAT SERVE THESE ROOM (BETWEEN SOURCE AND ROOMS) SHALL BE IN RSC, IMC, OR MI CABLE. SCHEDULE 40 PVC IS ALLOWED UNDERGROUND OR BELOW SLAB. FEEDERS SHALL RUN BELOW SLAB OR BE UL LISTED FOR 2-HOUR RATING. WIRING WITHIN ROOMS MAY BE ANY WIRING METHOD ALLOWED IN SPECIFICATIONS. IN ADDITION TO ABOVE ALL HVAC, FIRE ALARM, SECURITY, EMERGENCY COMMUNICATIONS, AND SIGNALING SYSTEM WIRING SHALL COMPLY WITH NEC 708.14.

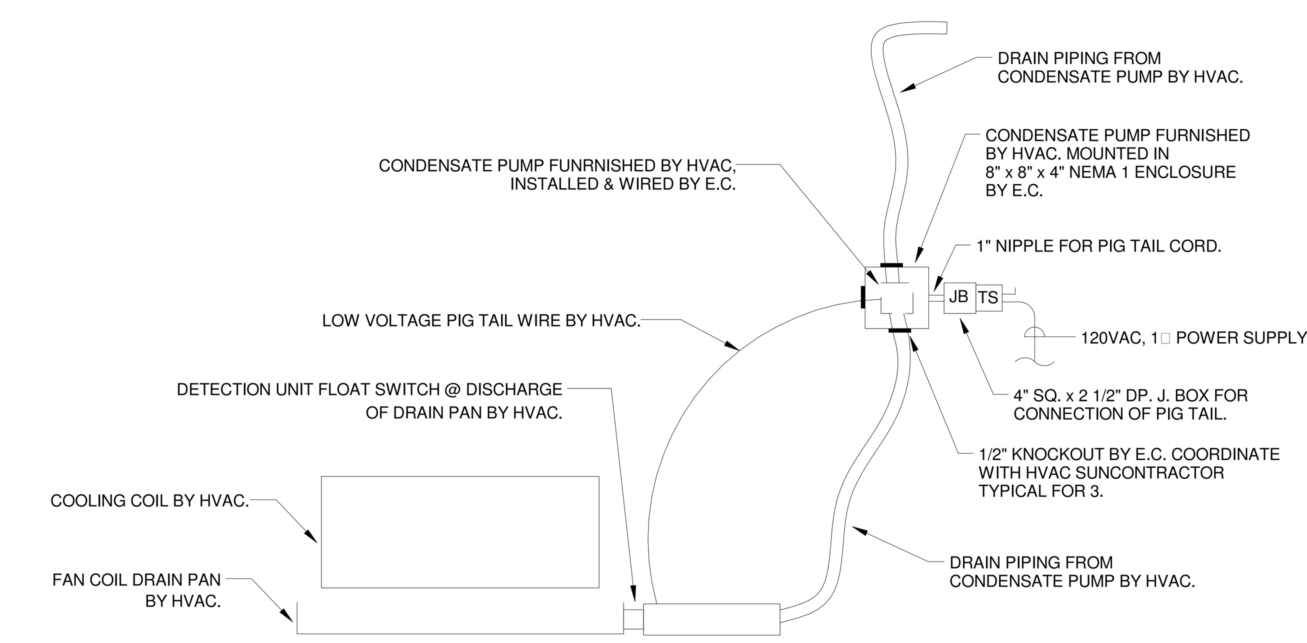

1/E303 CONDENSATE PUMP (CP) WIRING DETAIL

SCALE: N.T.S.

NOTE:

(1) WIRING MAY VARY BY MANUFACTURER. FIELD CONFIRM WITH APPROVED SHOP DRAWINGS PRIOR TO ROUGHING.

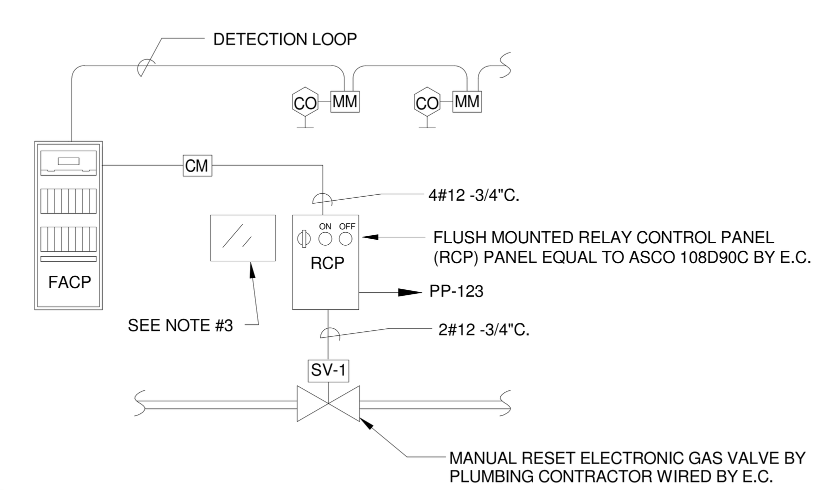

2/E303 CARBON MONOXIDE GAS SOLENOID SHUT DOWN DETAIL

SCALE: NTS

NOTES:

1. CARBON MONOXIDE (CO) DETECTORS SHALL BE PROGRAMMED AS SUPERVISORY POINTS IN THE FACP. UPON DETECTION OF CO, POWER SHALL BE INTERRUPTED TO THE (RCP) AND THE GAS SHUTOFF WILL CLOSE.
2. GAS FLOW MAY BE RESTARTED AFTER THE CO DETECTION AND THE FACP ARE RESET WHICH WILL RE-POWER THE (RCP). TURNING THE KEY SWITCH TO "ON" WILL ENERGIZE THE SOLENOID.
3. YELLOW ENGRAVED WARNING PLACARD, MOUNTED ADJACENT TO THE (RCP), WITH THE FOLLOWING"CAUTION- GAS FLOW IS RE-ESTABLISHED WHEN "ON" KEY SWITCH IS TURNED AND GAS VALVE IS MANUALLY RESET. RELIGHT ALL ASSOCIATED PILOTS IMMEDIATELY UPON RESET. CO DETECTORS AND THE FIRE ALARM SYSTEM CONTROL PANEL MUST CLEAR OF ANY CO ALARMS PRIOR TO RESET".

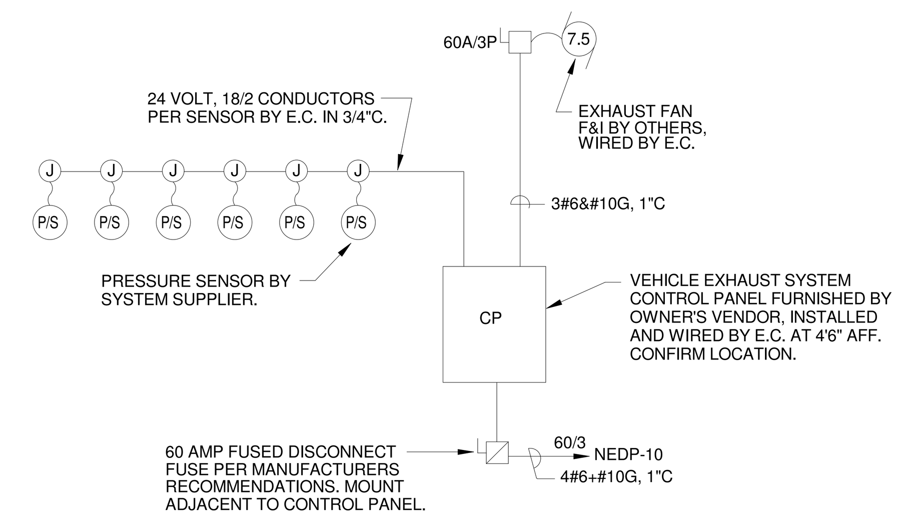

3/E303 VEHICLE EXHAUST SYSTEM RISER DIAGRAM

SCALE: N.T.S.

GARCIA GALUSKA DESOUSA INC.
CONSULTING ENGINEERS
370 Faunce Corner Road, Dartmouth, MA 02747 - 1271
508 - 998 - 5700 FAX 508 - 998 - 0883 E - MAIL info@g - g - d .com

ARCHITECTS • PROJECT MANAGERS
DORE & WHITTIER ARCHITECTS, INC.
Burlington, VT 05401
212 Battery Street
P : 802.863.1428
F : 802.863.6955
Newburyport, MA 01950
260 Merrimac Street, Bldg 7
P : 978.499.2999
F : 978.499.2944
www.doreandwhittier.com

Project No. 14-690

WESTFORD FIRE STATION

65 Boston Road
Westford, MA 01886

COPYRIGHT © 2014 by Dore & Whittier Architects Inc. (D&W) These documents are D&W's instruments of service and as such D&W retains all copyrights, common law and statutory rights. Use of these documents without D&W's express, written permission will result in copyright infringement.

SCHEMATIC DESIGN

REVISION:	Date:

DATE: 11/21/2015 SCALE:

DRAWN BY: MLP CHK'D BY: DMP

SHEET TITLE: MECHANICAL EQUIPMENT CONNECTION SCHEDULES & DETAILS

SHEET #: E303

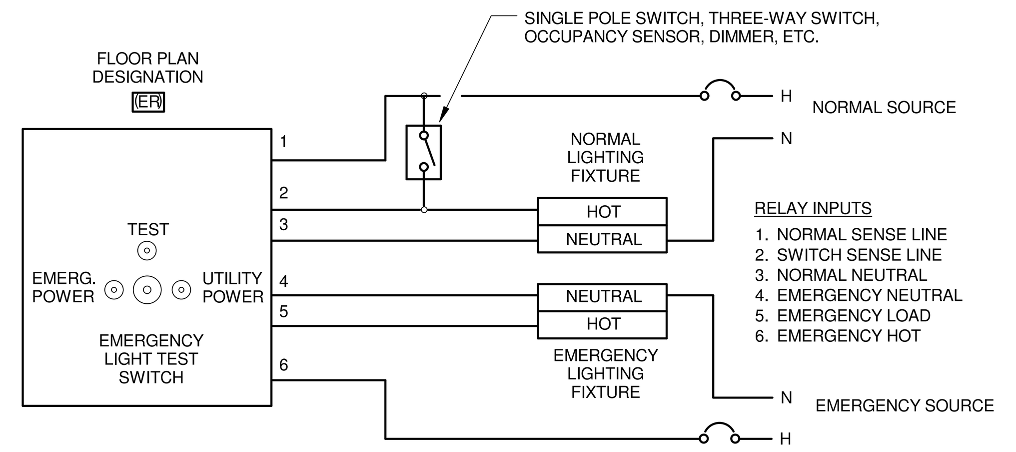

NOTES:

1. ALL SWITCH AND SENSOR CONTROLLED EMERGENCY LIGHTING IN PUBLIC AREAS, EGRESS ROUTES AND ALL "NORMALLY-OFF" EMERGENCY LIGHTING SHALL BE CONTROLLED BY AN EMERGENCY SUPERVISORY RELAY TO AUTOMATICALLY ENERGIZE EMERGENCY LIGHTS WHEN NORMAL (UTILITY) POWER FAILS. WHERE MORE THAN THREE CIRCUITS SERVE AN AREA, PROVIDE A HOMERUN(S) FROM RESPECTIVE LIGHTING PANEL(S) TO SENSING COIL.
2. THE EMERGENCY BYPASS RELAY TIES TO THE NORMAL CIRCUIT AND SWITCH TO MONITOR THE NORMAL SOURCE AND MIMIC THE SWITCH POSITION. THE RELAY ALLOWS THE ROOM SWITCH TO CONTROL THE EMERGENCY FIXTURE(S) DURING NORMAL OPERATION AND BYPASS THE SWITCH TO TURN LIGHTS ON DURING EMERGENCY OPERATION REGARDLESS OF THE SWITCH POSITION.
3. RELAY SHALL BE UL 924 LISTED, SOLID STATE, AND HAVE MECHANICALLY HELD RELAYS IN COMPLIANCE WITH NEC 700 AS MANUFACTURED BY BODINE, SCHNEIDER, BLTC, OR EQUAL.
4. MOUNT RELAY IN A SQUARE 4 11/16" JUNCTION BOX TO BE LOCATED ABOVE THE CEILING DIRECTLY ABOVE THE WALL SWITCH LOCATION OR IN A REMOTE LOCATION WHERE HARD CEILINGS WOULD PREVENT ACCESS. COORDINATE FINAL LOCATION WITH BUILDING CONSTRUCTION AND THE WORK OF OTHER TRADES TO ENSURE A READILY ACCESSIBLE MOUNTING LOCATION..

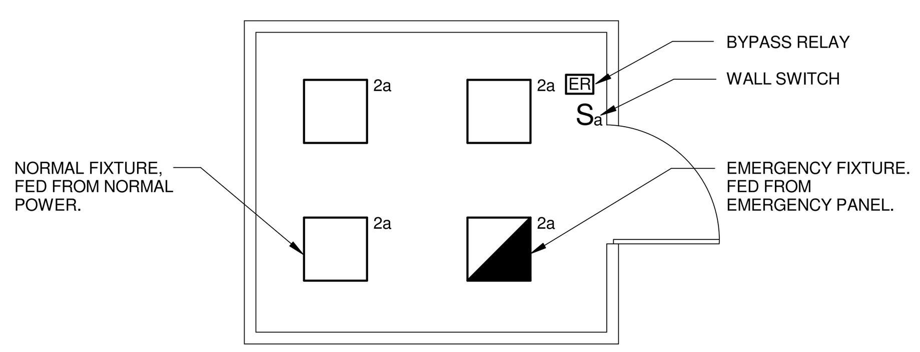

APPLICATION EXAMPLE

1 / E304 EMERGENCY SUPERVISORY BY-PASS RELAY DETAIL

SCALE: N.T.S.

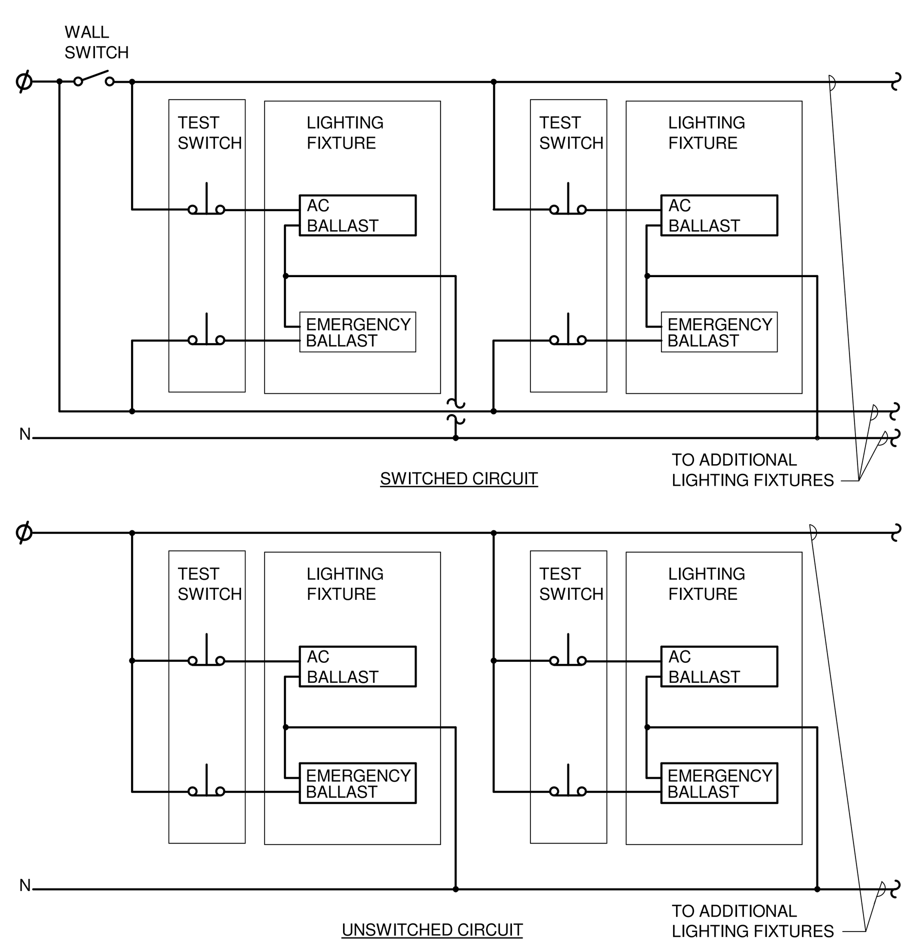

NOTES:

1. REFER TO MANUFACTURER'S INSTALLATION INSTRUCTIONS FOR EXACT WIRING REQUIREMENTS.
2. COORDINATE EXACT PLACEMENT OF TEST SWITCH & INDICATOR LIGHT WITH ARCHITECT.

3 / E304 EMERGENCY BALLAST WIRING DIAGRAMS

SCALE: NOT TO SCALE

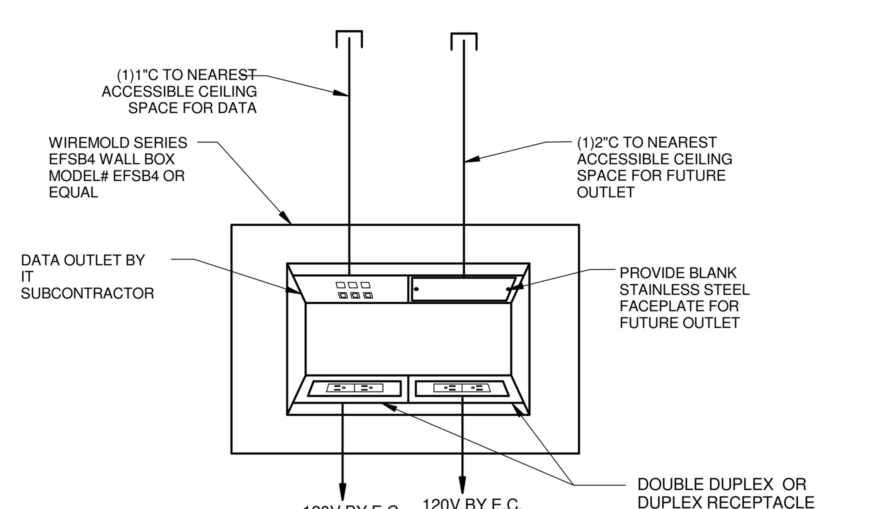

4 / E304 TVE / TVC BOX AND CONDUIT PROVISION DETAIL

SCALE: N.T.S.

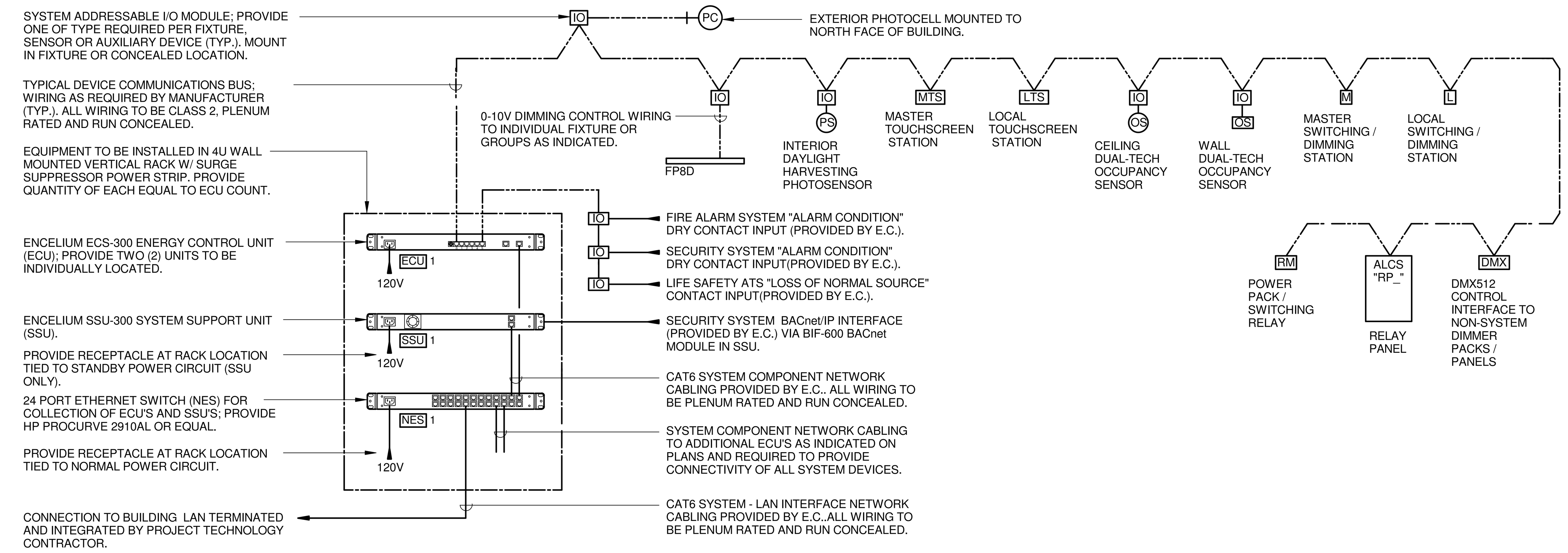

AUTOMATED LIGHTING CONTROL SYSTEM NOTES:

1. PROVIDE SWITCHING AND 0-10V DIMMING CONTROL FOR ALL LIGHTING (REFER TO PLANS) WITH PRESETS VIA I/O MODULES AND ACCESSORY POWER PACKS..
2. PROVIDE ALL SYSTEM COMPONENTS (AND WARRANTIES) FROM A SINGLE MANUFACTURER EXCEPT WHERE OTHERWISE SPECIFIED.
3. PROVIDE GANGED MASTER AND LOCAL SWITCHES AT LOCATION AS INDICATED FOR USER CONTROL OF LIGHTING (UNDER COMMON MULTI-GANG PLATE).ALL SWITCHES SHALL BE PROVIDED WITH ENGRAVED LABELS ON PLATES DESIGNATING THEIR FUNCTION. FILL FOR ENGRAVED LETTERING SHALL BE AS DIRECTED BY THE ARCHITECT.
4. PROVIDE ENERGY MONITORING AND REPORTING MODULE TO ALLOW FOR ALL LIGHTING ELECTRICAL.CONSUMPTION TO BE RECORDED, TRENDED, AND PASSED TO THE BMS SYSTEM VIA THE BACNET IP INTERFACE.
5. THE BASIS-OF-DESIGN FOR THIS SYSTEM IS THE OSRAM ENCELIUM SYSTEM (W/ POLARIS 3D AND PCS SOFTWARE) INCLUDING THE FOLLOWING COMPONENTS:

MASTER TOUCHSCREEN STATION:	#RTI-K4-M-BZW-K4-CO
LOCAL TOUCHSCREEN STATION:	#RTI-K4-L-BZW-K4-CO
LOCAL SWITCHING / DIMMING STATION:	#EN-WS-SC3D-GB2
MASTER SWITCHING / DIMMING STATION:	#EN-WS-ZC3-GB2
CEILING DUAL-TECH OCCUPANCY SENSORS:	#SCM-2000
WALL DUAL-TECH OCCUPANCY SENSORS	#SCM-2000-W
CEILING PHOTOSENSOR:	#CES/I
EXTERIOR PHOTOCELL:	#CES/O
POWER PACK / SWITCHING RELAY:	#PPK-020
RELAY PANEL:	#EN-RP-24C-GB2

6. REFER TO THE "ALCS METHODS OF OPERATION NOTES" FOR SYSTEM SETUP REQUIREMENTS..
7. ALCS VENDOR SHALL ASSIST THE BMS SUB-SUB CONTRACTOR WITH ALL MAPPING OF BACNET DEVICES / POINTS.
8. LUTRON, SENSOR SWITCH, PHILLIPS, OR EQUAL ARE ACCEPTABLE MANUFACTURER OPTIONS.

ALCS METHODS OF OPERATION NOTES

ZONING & PRESET LEVELS :

1. INTERIOR SPACES SHALL BE PROGRAMMED FOR 50% AND 100% DIMMING LEVELS TO BE ACTIVATED VIA LOCAL SWITCH STATIONS. LEVELS MAY BE ADJUSTED OUTSIDE OF THESE PRESETS VIA THE LOCAL WALL STATION. HOWEVER, WHERE PHOTOSENSORS ARE PRESENT THE LIGHTING SHALL NOT BE ALLOWED EXCEED THE FOOTCANDLE LEVEL ESTABLISHED BY THE SPACE'S PHOTOSENSOR BASED ON AVAILABLE DAYLIGHT CONTRIBUTION AT ANY GIVEN TIME.
2. LIGHTING WITHIN THE DAYLIGHT ZONE ADJACENT TO OPENINGS TO THE EXTERIOR SUCH AS WINDOWS AND SKYLIGHTS (DEPTH OF EACH DAYLIGHT ZONE RELATIVE TO THE DAYLIGHT OPENING SHALL BE AS DEFINED BY UTILITY COMPANY ADVANCED BUILDING PROGRAM CORE REQUIREMENTS AND COMMONWEALTH OF MASSACHUSETTS ENERGY CODE) SHALL BE PROGRAMMED TO ALLOW FOR CONTROL SEPARATE FROM THE REMAINDER OF THE SPACE.
3. EXTERIOR LIGHTING SHALL BE PROGRAMMED FOR 50% (POST-CURFEW) AND 100% (PRE-CURFEW) DIMMING LEVELS TO BE ACTIVATED VIA PHOTOCELL SETPOINTS AND TIMED SCHEDULES.
4. INTERIOR AND EXTERIOR PATHS OF EGRESS SHALL BE PROGRAMMED TO ACTIVATE AT 100% LEVELS UPON RECEIPT OF AN ALARM SIGNAL FROM THE LIFE SAFETY AUTOMATIC TRANSFER SWITCH, FIRE ALARM SYSTEM, AND SECURITY SYSTEM. LIGHTING LEVELS SHALL BE MAINTAINED AT 100% LEVELS REGARDLESS OF SUBSEQUENT INPUT REQUESTS UNTIL THE ORIGINATING ALARM SIGNAL IS RESTORED TO A NORMAL CONDITION. CONTACT CLOSURE OUTPUTS FROM EACH PIECE OF EQUIPMENT / SYSTEM SHALL BE PROVIDED BY THE RESPECTIVE VENDOR WITH COORDINATION OF ALL PROGRAMMING REQUIRED TO PROVIDE THE FUNCTIONALITY DESCRIBED.
5. REFER TO SPECIFICATIONS FOR FURTHER CONTROL SCENARIOS SUCH AS LOAD SHEDDING, PEAK LIMITING, TASK TUNING, ETC..
6. EXACT ZONING AND LEVEL PROGRAMMING SHALL BE TO MAPPED OUT (VIA BUILDING FLOOR & SITE GRAPHICS IN SYSTEM SOFTWARE) WITH THE OWNER OR THEIR REPRESENTATIVE PRIOR TO SYSTEM SETUP AND PROGRAMMING OF THE SYSTEM. ALL PROGRAMMING SHALL BE CONFIRMED AND COMPLETED PRIOR TO COMMISSIONING NO OWNER REQUESTED PROGRAMMING SHALL BE ALLOWED. WHICH WILL VIOLATE THE LEED PROGRAM REQUIREMENTS OR COMMONWEALTH OF MASSACHUSETTS BUILDING, ELECTRICAL, AND ENERGY CODES OR ANY CODES. REFERENCED THEREIN.

SWITCH STATION OPERATIONS :

1. INTERIOR SPACES SHALL BE PROVIDED WITH SWITCH STATIONS OF THE 3 BUTTON + RAISE/LOWER TYPE. BUTTONS SHALL BE PROGRAMMED GENERALLY AS FOLLOWS: BUTTON 1 = "ON" 100%, BUTTON 2 = "ON" 50%, BUTTON 3 = "ALL OFF", BUTTON 4 = RAISE/LOWER. WHERE PHOTOSENSORS ARE PRESENT THE LIGHTING SHALL NOT BE ALLOWED EXCEED THE FOOTCANDLE LEVEL ESTABLISHED BY THE SPACE'S PHOTOSENSOR BASED ON AVAILABLE DAYLIGHT CONTRIBUTION AT ANY GIVEN TIME.
2. SWITCH STATIONS SHALL BE PROGRAMMED FOR OVERRIDE OF TIMED SCHEDULE "OFF" PERIODS FOR A MAXIMUM OF 90 MINUTES.

SENSOR OPERATIONS :

1. INTERIOR PHOTOSENSORS (ADDRESSABLE): EACH PHOTOSENSOR SHALL BE PROGRAMMED TO MAINTAIN FOOTCANDLE SETPOINTS ESTABLISHED FOR EACH SPACE DURING SYSTEM SETUP AND COMMISSIONING. DIMMING DEADBANDS AND FADE/RISE RATES SHALL BE ESTABLISHED TO PROVIDE SMOOTH, NON-INTRUSIVE, CHANGES IN SPACE LIGHT LEVELS IN RESPONSE TO CHANGING DAYLIGHT CONTRIBUTIONS AT ANY GIVEN TIME.
2. EXTERIOR PHOTOCELLS (ADDRESSABLE): SENSOR SHALL BE PROGRAMMED TO TURN SITE LIGHTING "ON" AT DUSK AND TURN LIGHTS "OFF" AT DAWN. TIMED SCHEDULE PRESETS WILL DETERMINE OUTPUT LEVELS.
3. OCCUPANCY SENSORS (ADDRESSABLE): EACH OCCUPANCY SENSOR SHALL BE PROGRAMMED TO OPERATE IN A "VACANCY" MODE UNLESS OTHERWISE NOTED (CORRIDORS, STAIRS, AND ALL PORTIONS OF THE EGRESS PATH ARE GENERAL EXCEPTIONS) SO THAT MANUAL ACTIVATION OF THE LIGHTING VIA LOCAL SWITCH STATIONS IS REQUIRED. SENSORS SHALL MAINTAIN 100% DIMMING LEVELS LIGHTING FOR AS LONG AS MOTION IS DETECTED. ABSENCE OF MOTION DETECTION FOR THE FOLLOWING TIME PERIODS SHALL TRIGGER THE LIGHTING TO DIM TO THE LEVELS ASSOCIATED WITH EACH TIME PERIOD: 5 MINUTES = 50%, 10 MINUTES = 25%, 15 MINUTES = 10%, 30 MINUTES = OFF. NON-DIMMED FIXTURES SHALL SWITCH TO THE LEVELS ASSOCIATED WITH EACH TIME PERIOD: 5 MINUTES = 50%, 15 MINUTES = OFF. FADE/RISE RATES SHALL BE ESTABLISHED TO PROVIDE SMOOTH, NON-INTRUSIVE, CHANGES IN SPACE LIGHT LEVELS. MOTION DETECTED AT ANYTIME PRIOR TO THE 30 MINUTE FULL TIME-OUT SHALL RETURN THE LIGHTING TO THE 100% LEVEL.
4. SENSOR ADJUSTMENTS FOR ALL FUNCTIONS SHALL BE TURNED TO THE MINIMUM ON EACH DEVICE AND ADJUSTED SOLELY THROUGH THE SYSTEM SOFTWARE.

2 / E304 AUTOMATED LIGHTING CONTROL SYSTEM ONE-LINE DIAGRAM

SCALE: N.T.S.

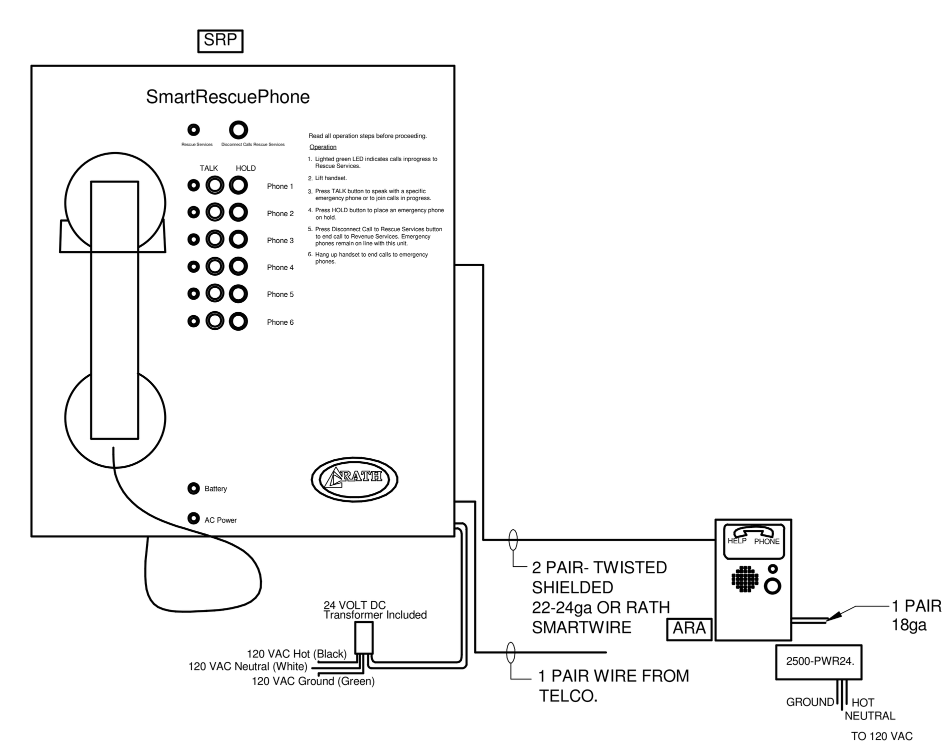

5 / E304 SMARTRESCUE BASE STATION WIRING DIAGRAM

SCALE: N.T.S.

SRP SMART RESCUE PHONE

ARA AREA RESCUE ASSISTANCE BUTTON

GARCIA GALUSKA DESOUSA INC.
CONSULTING ENGINEERS
370 Faunce Corner Road, Dartmouth, MA 02747 - 1271
508 - 998 - 5700 FAX 508 - 998 - 0883 E - MAIL info@g - g - d . com

ARCHITECTS • PROJECT MANAGERS
DORE & WHITTIER ARCHITECTS, INC.
Burlington, VT 05401
212 Battery Street
P : 802.863.1428
F : 802.863.6955
Newburyport, MA 01950
260 Merrimac Street, Bldg 7
P : 978.499.2999
F : 978.499.2944
www.doreandwhittier.com

Project No. 14-690

WESTFORD FIRE STATION

65 Boston Road
Westford, MA 01886

COPYRIGHT © 2014 by Dore & Whittier Architects Inc. (D&W) These documents are D&W's instruments of service and as such D&W retains all copyrights, common law and statutory rights. Use of these documents without D&W's express, written permission will result in copyright infringement.

SCHEMATIC DESIGN

REVISION:	Date:

DATE: 11/21/2015
SCALE:
DRAWN BY: Author
CHK'D BY: Checker

SHEET TITLE: LIGHTING CONTROL RISER AND DETAILS

SHEET #: E304

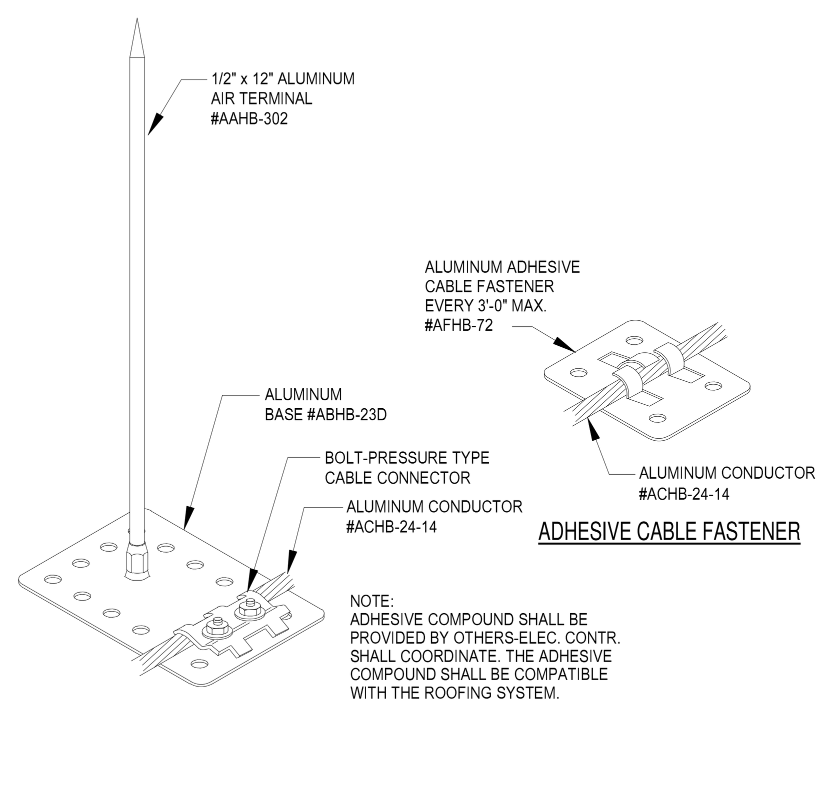

1 AIR TERMINAL BASE
NTS SYMBOL ◦ A

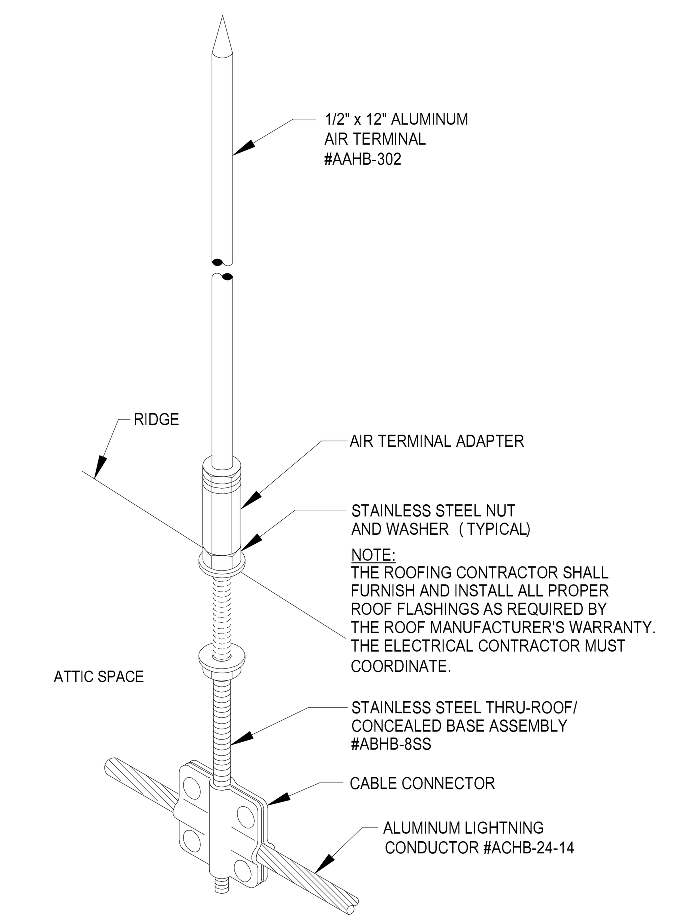

2 CONCEALED AIR TERMINAL BASE
NTS SYMBOL ◦ C

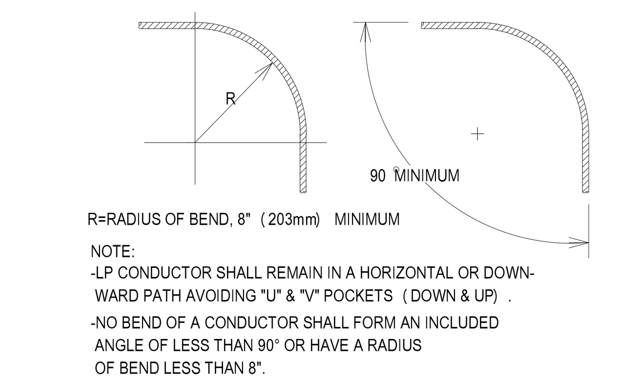

8" MIN. RADIUS BEND IN CABLE

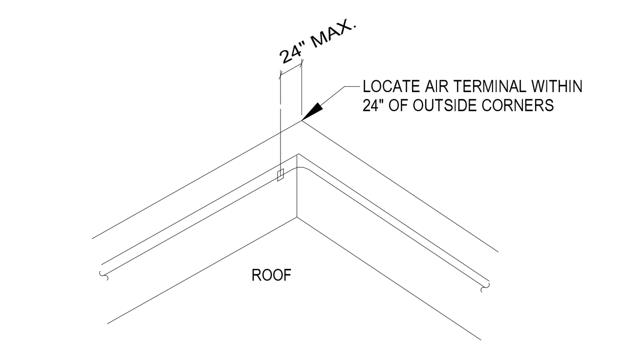

AIR TERMINALS SHALL BE LOCATED WITHIN 24" OF OUTSIDE CORNERS
NTS

NOTE: AIR TERMINALS ARE REQUIRED ON ROOF VENTILATORS/EXH. FANS THAT ARE NOT WITHIN A ZONE OF PROTECTION OR WHEN HIGHER THAN ADJACENT AIR TERMINALS.

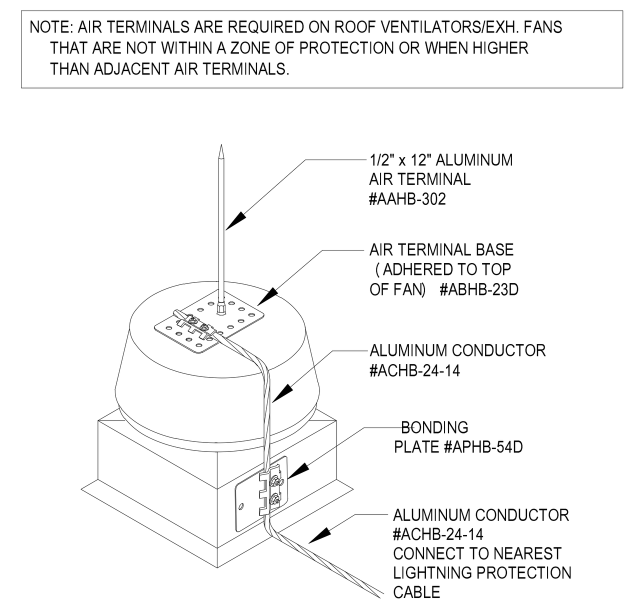

3 AIR TERMINAL AT EXH. FAN
NTS

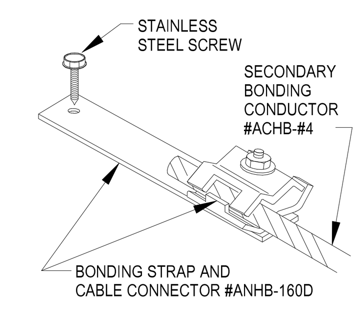

BONDING LUG (GUTTERS)
NTS

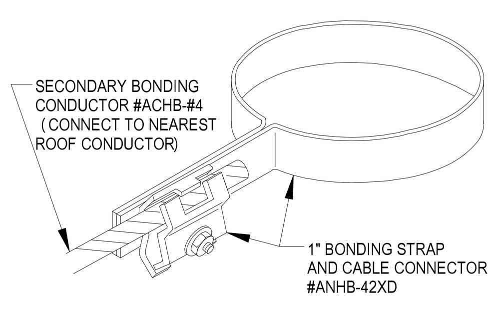

BONDING STRAP AT (VENT PIPES)
NTS

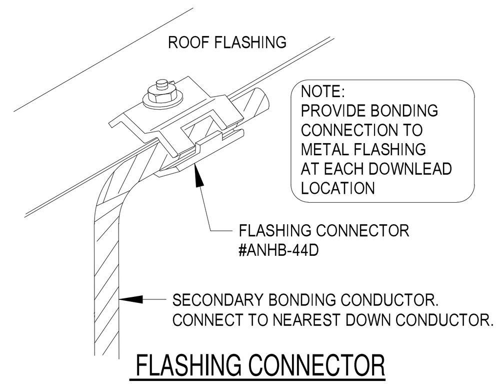

FLASHING CONNECTOR
NTS

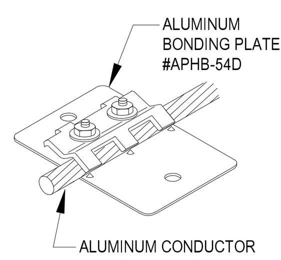

BONDING PLATE
NTS

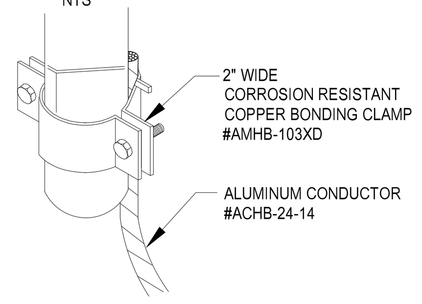

PIPE CLAMP (RAILINGS, ANTENNAS, ETC.)
NTS

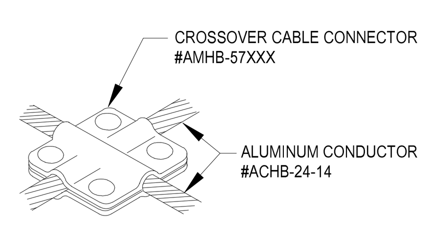

CROSSOVER CABLE CONNECTOR
NTS

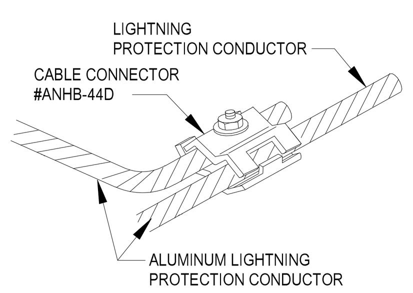

CABLE CONNECTOR
NTS

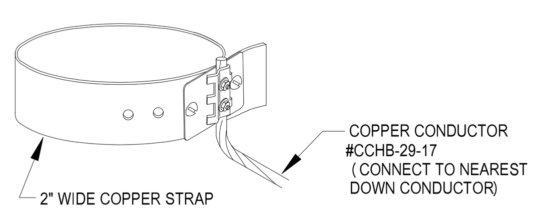

WATERLINE BONDING STRAP
NTS

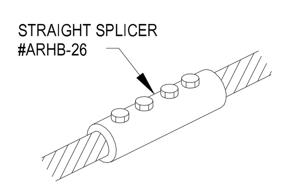

STRAIGHT SPLICER
NTS

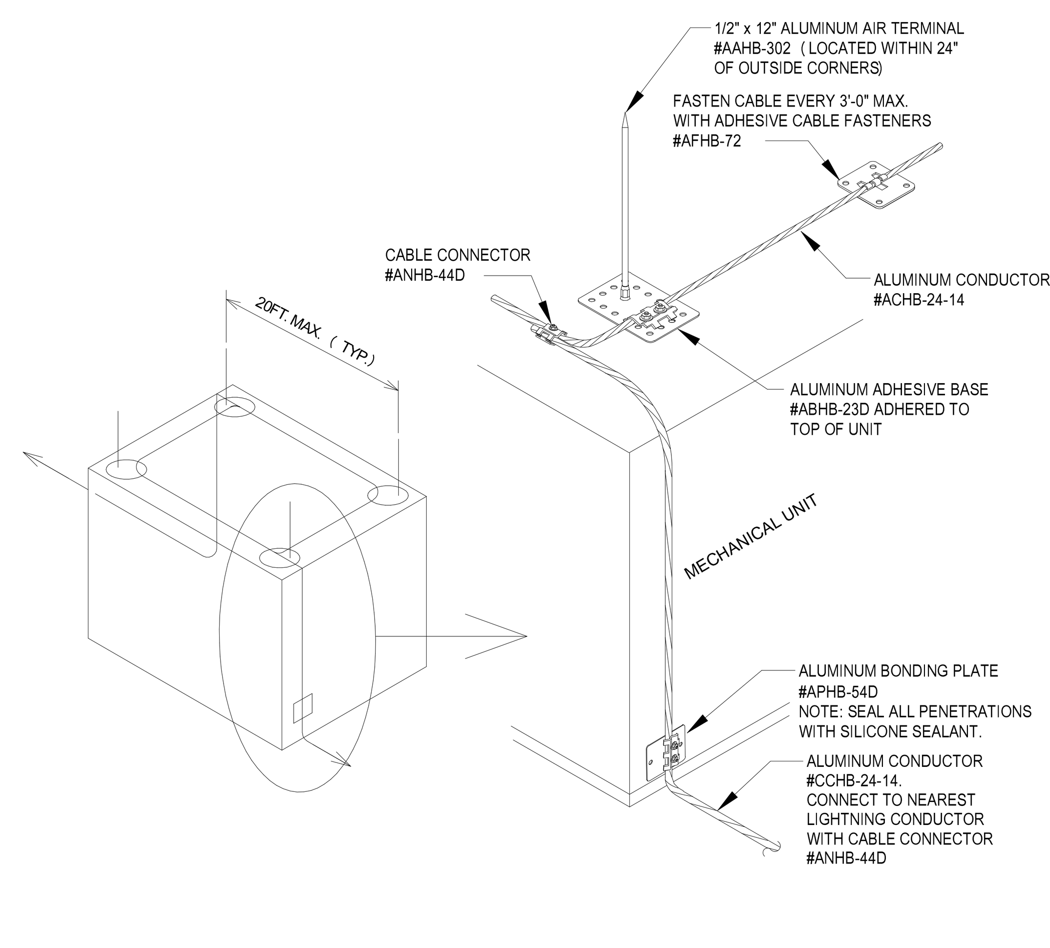

4 LIGHTNING PROTECTION AT ROOF TOP UNIT

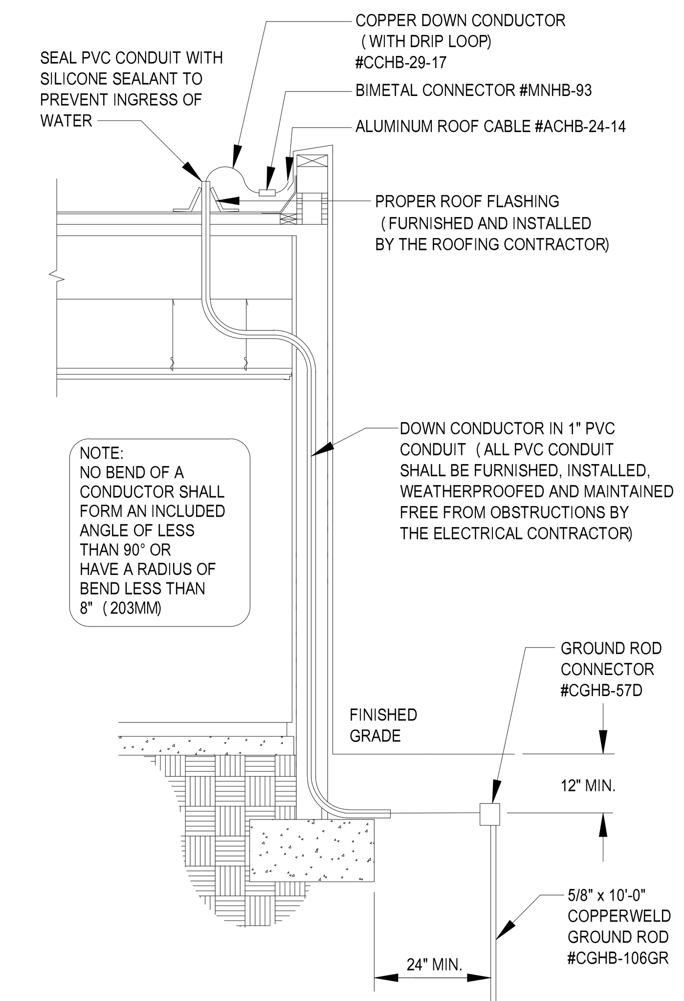

5 LIGHTNING PROTECTION GROUNDING
NTS SYMBOL △

LIGHTNING PROTECTION NOTES

1. NOT USED
2. THE LIGHTNING PROTECTION SYSTEM AS SHOWN ON DRAWING HAS BEEN DESIGNED IN ACCORDANCE WITH UL96 & NFPA-780 LIGHTNING PROTECTION SYSTEM STANDARDS.
3. CONDUCTORS SHALL MAINTAIN A HORIZONTAL OR DOWNWARD COURSE, FREE FROM "U" OR "V" (DOWN AND UP) POCKETS.
4. NO BEND OF CONDUCTOR SHALL FORM AN ANGLE OF LESS THAN 90° NOR SHALL HAVE A RADIUS OF BEND LESS THAN 8".
5. AIR TERMINALS SHALL BE SPACED EVERY 20'-0" MAXIMUM AROUND THE ROOF PERIMETER AND/OR ALONG ROOF RIDGES. AIR TERMINALS SHALL BE LOCATED WITHIN 2'-0" OF OUTSIDE CORNERS.
6. AIR TERMINALS SHALL BE SPACED EVERY 50'-0" MAXIMUM IN CENTER ROOF AREAS.
7. ACTUAL JOBSITE CONDITIONS MAY REQUIRE SLIGHT ALTERATIONS IN AIR TERMINAL, DOWN CONDUCTOR AND GROUND ROD LOCATIONS.
8. BARE COPPER MATERIALS SHALL NOT BE INSTALLED ON ALUMINUM OR GALVALUM SURFACES, AND ALUMINUM MATERIALS SHALL NOT BE INSTALLED ON COPPER SURFACES.
9. ALL LIGHTNING PROTECTION CONDUCTORS SHALL BE FASTENED EVERY 3'-0" MAX.
10. METALLIC BODIES OF INDUCTANCE SITUATED WITHIN 6'-0" OF A LIGHTNING CONDUCTOR OR ANOTHER BONDED METAL BODY SHALL BE INTERCONNECTED TO THE LIGHTNING CONDUCTOR SYSTEM, UNLESS INHERENTLY GROUNDED.
11. BOND TO ALL METAL BODIES OF CONDUCTANCE WITHIN 6'-0" OF THE MAIN LIGHTNING CONDUCTOR SUCH AS EXHAUST FANS, ROOF VENTS, METAL COOLING TOWERS, H.V.A.C. UNITS, LADDERS, RAILINGS, ANTENNAS, SKYLIGHTS, METAL STACKS AND ANY OTHERS LARGE METAL BODY WHOSE HEIGHT EXCEEDS THAT OF THE AIR TERMINAL IN USE, UNLESS PROTECTED BY HIGHER ROOF ELEVATIONS.
12. CONNECTIONS TO GROUND RODS SHALL BE MADE AT A POINT NOT LESS THAN 1'-0" BELOW FINISHED GRADE AND 2'-0" AWAY FROM FOUNDATION WALL.
13. BOND TO WATERLINES (DOMESTIC & FIRE) .
14. A LIGHTNING ARRESTOR, PROTECTOR OR ANTENNA DISCHARGE UNIT SHALL BE INSTALLED ON EACH ELECTRIC AND TELEPHONE SERVICE AND RADIO AND TELEVISION ANTENNA LEAD-IN BY THE ELECTRICAL CONTRACTOR, IN ACCORDANCE WITH NFPA-70.
15. TRANSIENT VOLTAGE SURGE SUPPRESSION (TVSS) OF SERVICES SHALL BE PROVIDED BY THE ELECTRICAL CONTRACTOR. (I.E. COMPUTERS, COPIERS, TELEPHONE, ETC..
16. UPON COMPLETION OF INSTALLATION UL MASTER LABEL SHALL BE ISSUED.

LIGHTNING PROTECTION MATERIALS LIST

———	ALUMINUM LIGHTNING PROTECTION MAIN CONDUCTOR	ACHB-24-14
	ALUMINUM LIGHTNING PROTECTION SECONDARY BONDING CABLE*	ACHB-#4
	COPPER LIGHTNING PROTECTION DOWN CONDUCTOR	CCHB-29-17
	BIMETAL CONNECTOR	MNHB-93
	CABLE FASTENERS (FASTEN CABLE EVERY 3FT. MAX.)	AFHB-72, 66, 64, CFHB-64
◦ A	1/2" x 12" ALUMINUM AIR TERMINAL AND ADHESIVE BASE	AAHB-302, ABHB-23D
◦ C	1/2" x 12" ALUMINUM AIR TERMINAL AND CONCEALED BASE	AAHB-302, ABHB-8SS
	SECONDARY BONDING: *FLASHING CONNECTOR *METAL ROOF DRAIN / GUTTER CONNECTOR *METAL VENT PIPE CONNECTOR	 ANHB-44D ANHB-160D ANHB-42XD
	ALUMINUM BONDING PLATE (AT ALUM. RTU & FANS)	APHB-54D
	CORROSION RESISTANT COPPER BONDING PLATE (TO BASE OF STEEL AT EACH DOWNLEAD)	PPHB-54D
	PIPE CLAMP (ANTENNAS, RAILINGS, ETC.)	PMHB-103XD
	"C" CLAMP (LADDERS)	PPHB-54D
	CABLE CONNECTOR	ANHB-44D, CNHB-44D
	STRAIGHT SPLICER	ARHB-26
	CROSSOVER CABLE CONNECTOR	CMHB-57XXX
	WATERLINE CONNECTOR (FIRE WATER & DOMESTIC WATER)	CMHB-97D
⊣‖	5/8" x 10'-0" COPPERWELD GROUND ROD AND CONNECTOR	CGHB-106GR, CGHB-57D

GARCIA GALUSKA DESOUSA INC.
CONSULTING ENGINEERS

DORE & WHITTIER ARCHITECTS, INC.
ARCHITECTS • PROJECT MANAGERS

Project No. 14-690

WESTFORD FIRE STATION
65 Boston Road
Westford, MA 01886

SCHEMATIC DESIGN

REVISION:	Date:

DATE: 11/21/2015
SCALE:
DRAWN BY: MLP
CHK'D BY: DMP

SHEET TITLE: LIGHTNING PROTECTION DETAILS

SHEET #: E305

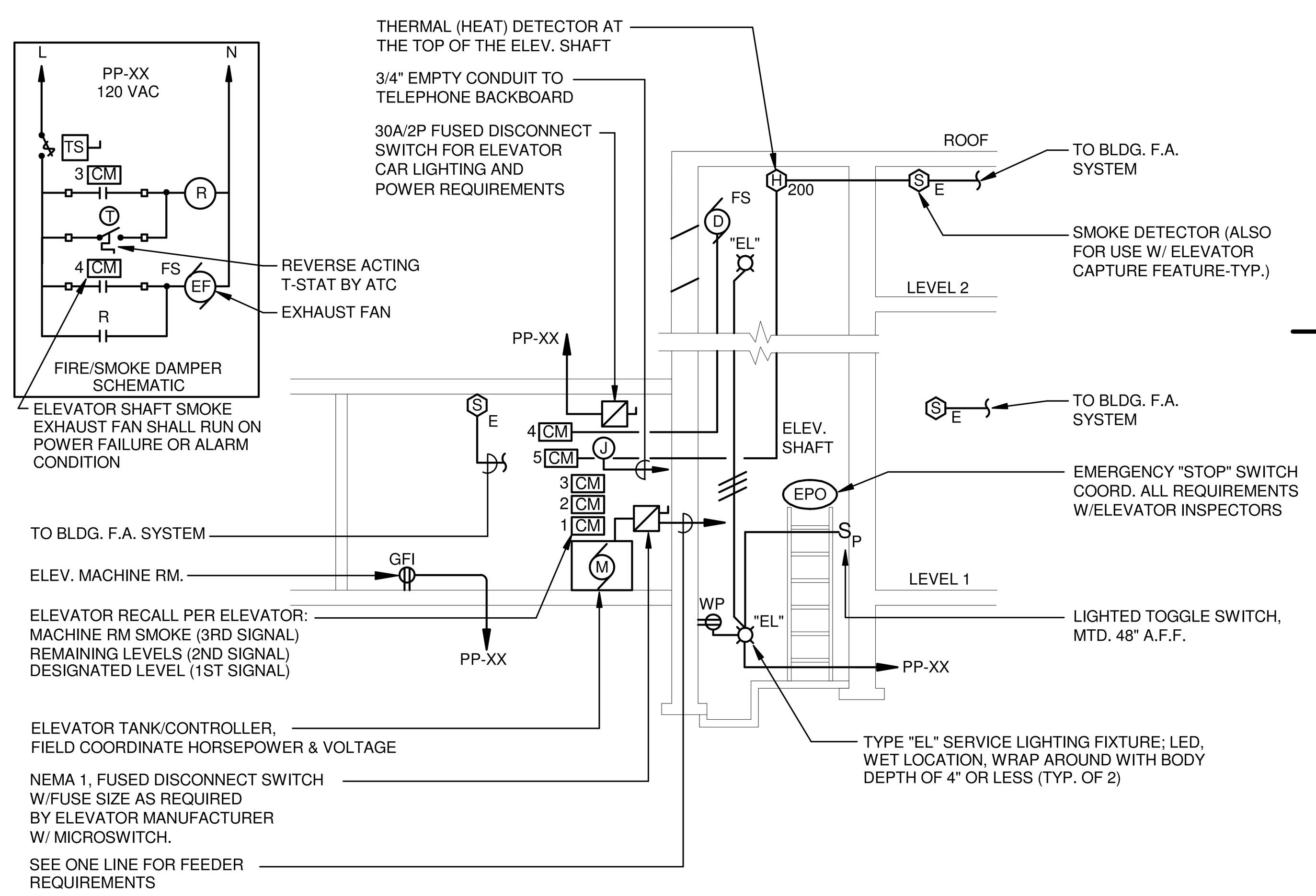

SEQUENCE OF OPERATION

1. SMOKE DETECTORS LOCATED IN EACH ELEVATOR LOBBY, MACHINE ROOM AND A FIXED TEMPERATURE HEAT DETECTOR AT TOP OF HOISTWAY SHALL INITIATE ELEVATOR RECALL IN ADDITION TO SENDING SYSTEM INTO "AUTO" ALARM MODE FOR FIRE FIGHTERS SERVICE.
2. FIVE (5) CONTROL MODULES WILL BE LOCATED IN THE ELEVATOR MACHINE ROOM.
3. THE SMOKE DETECTOR LOCATED ON THE DESIGNATED LEVEL WILL ACTUATE THE FIRST CONTROL MODULE OF EACH ELEVATOR AND INITIATE THE ALTERNATE LEVEL RECALL.
4. THE SMOKE DETECTORS ON THE REMAINING ELEVATOR LEVELS WILL ACTUATE THE SECOND CONTROL MODULE FOR DESIGNATED LEVEL RECALL FOR EACH ELEVATOR.
5. THE THIRD CONTROL MODULE WILL BE ACTUATED BY A FIRE ALARM INITIATING DEVICE IN THE MACHINE ROOM, CONTROL SPACE, CONTROL ROOM AND/OR HOISTWAY AND WILL ILLUMINATE THE ASSOCIATED FIREFIGHTERS HAT.
6. WHERE THE ELEVATOR MACHINE ROOM IS LOCATED AT THE DESIGNATED LEVEL, THAT MACHINE ROOM SMOKE DETECTOR WILL ALSO ACTUATE THE FIRST CONTROL MODULE TO RECALL ELEVATOR TO THE ALTERNATE LEVEL.
7. THE FOURTH CONTROL MODULE WILL BE ACTUATED BY A FIRE ALARM INITIATING DEVICE IN THE MACHINE ROOM, CONTROL SPACE, CONTROL ROOM AND/OR HOISTWAY AND WILL ENERGIZE THE MACHINE ROOM EXHAUST FAN.
8. THE FIFTH CONTROL MODULE WILL BE ACTUATED BY A FIRE ALARM INITIATING DEVICE IN THE MACHINE ROOM, CONTROL SPACE, CONTROL ROOM AND/OR HOISTWAY AND WILL DE-ENERGIZE THE FIRE/SMOKE DAMPER CAUSING IT TO OPEN.
9. THE HEAT DETECTOR AT THE TOP OF THE HOISTWAY WILL ALSO ACTUATE THE THIRD CONTROL MODULE IF NEEDED BY ELEVATOR MANUFACTURER OR REQUIRED BY AUTHORITY HAVING JURISDICTION.

1 / E400 — ELEVATOR SHAFT AND MACHINE ROOM (NO SPRINKLER) DETAIL

N.T.S.

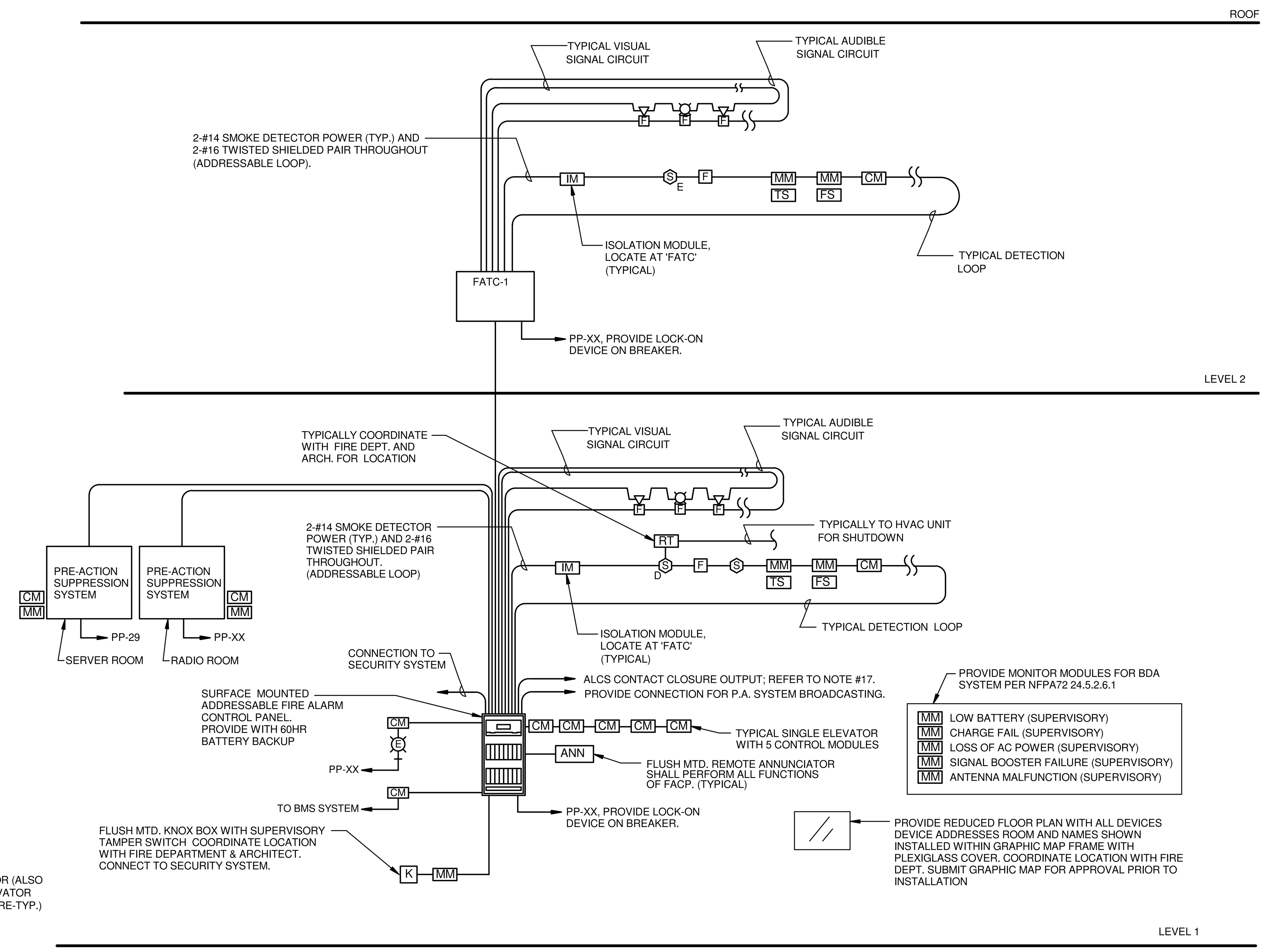

2 / E400 — FIRE ALARM RISER DIAGRAM

SCALE: N.T.S.

MAIN BUILDING	
LOOP NUMBER	ADDRESSABLE LOOP SCHEDULE
1	LEVEL 1
2	LEVEL 2

FIRE ALARM NOTES

1. E.C. SHALL REFER TO SPECIFICATIONS AND DRAWINGS FOR QUANTITY OF DEVICES, SPARE CAPACITY, PARTS, ETC.
2. E.C. SHALL FIELD CONFIRM LOCATIONS OF DUCT MOUNTED SMOKE DETECTORS. DUCT DETECTORS FURNISHED AND WIRED BY E.C.; INSTALLED BY HVAC.
3. TYPICALLY FIRE ALARM SYSTEM SIGNAL CONDUCTORS SHALL BE #14 AWG MINIMUM, TYPE THHN SOLID. FIRE ALARM MC CABLE WITH RED ARMOR IS ALLOWED WHERE RUN CONCEALED ABOVE CEILINGS AND ALLOWED BY CODE.
4. TYPICALLY ALL SPEAKER/STROBE UNITS SHALL BE WIRED SO THAT THE SPEAKERS AND THE STROBES CAN BE SILENCED SIMULTANEOUSLY.
5. ALL SPEAKER/STROBES SHALL BE MULTI-TAPPED TYPE. E.C. SHALL OWN dB ADJUSTING DURING FIRE DEPARTMENT TESTING.
6. ALL SPEAKER/STROBES SHALL BE MOUNTED IN ACCORDANCE WITH ADA/NFPA ROOM SPACING.
7. ALL DEVICES SHALL BE LABELED WITH CLEAR TAPE WITH BLACK INK. LABEL SHALL IDENTIFY LOOP# AND DEVICE NUMBER.
8. ALL REMOTE TEST STATIONS SHALL BE KEYED AND MOUNTED ADJACENT TO FACP OR AS DIRECTED BY LOCAL FIRE DEPT. LABEL EACH UNIT.
9. PULL STATIONS SHALL BE DOUBLE ACTION.
10. ALL TAMPER AND SUPERVISORY SWITCHES SHALL BE WIRED AS LOCAL SUPERVISORY ALARM CONDITION UPON ACTIVATION. TROUBLE OR SUPERVISORY SHALL BE SELF RESTORING.
11. PRIOR TO SUBMITTING SHOP DRAWINGS, COORDINATE WITH LOCAL FIRE DEPT. FOR EXACT REQUIREMENTS. OBTAIN FIRE PREVENTION RULES AND REGULATIONS WHEN AVAILABLE AND COMPLY IN FULL.
12. COORDINATE WITH SELECTED SYSTEM MANUFACTURER FOR WIRING REQUIREMENTS.
13. ALL DETECTION & SIGNAL WIRING SHALL BE CLASS "A".
14. SUBMIT AS PART OF SHOP DRAWINGS COMPLETE FLOOR PLANS & RISERS WITH ALL DEVICES SHOWN AND WITH DEVICE ADDRESSES.
15. PROVIDE ISOLATION MODULE FOR EVERY 20 DEVICES, TYPICAL.
16. ALL VISUAL SIGNALS SHALL BE SYNCHRONIZED.
17. THE AUTOMATED LIGHTING SYSTEM SHALL BE PROGRAMMED SO THAT UPON A BUILDING FIRE ALARM CONDITION, ALL CONTROLLED LIGHTING SHALL BE PROGRAMMED TO TURN "ON".
18. STOPPER II COVER SHALL NOT HAVE INTEGRAL AUDIBLE ALARM.
19. PROVIDE CONTACT CLOSURE INTERFACE TO AUTOMATED LIGHTING CONTROL SYSTEM (ALCS) VIA A SINGLE PAIR OF 2#18 CONDUCTORS. WHEN ALARM SYSTEM GOES INTO ALARM A SIGNAL SHALL BE ISSUED TO ALLOW THE ALCS TO TURN ALL INTERIOR AND EXTERIOR LIGHTING "ON" UNLESS NOTED OTHERWISE.

ROOM SPACING FOR WALL-MOUNTED VISIBLE APPLIANCES

	MINIMUM REQUIRED LIGHT OUTPUT EFFECTIVE INTENSITY (cd)		
MAXIMUM ROOM SIZE	ONE LIGHT PER ROOM (CEILING HEIGHT)	TWO LIGHTS PER ROOM (LOCATED ON OPPOSITE WALLS)	FOUR LIGHTS PER ROOM ONE LIGHT PER WALLS
20' x 20'	15	NA	NA
28' x 28'	30	UNKNOWN	NA
30' x 30'	34	15	NA
40' x 40'	60	30	15
45' x 45'	75	UNKNOWN	19
50' x 50'	94	60	30
54' x 54'	110	UNKNOWN	30
55' x 55'	115	UNKNOWN	28
60' x 60'	135	95	30
63' x 63'	150	UNKNOWN	37
68' x 68'	177	UNKNOWN	43
70' x 70'	184	95	60
80' x 80'	240	135	60
90' x 90'	304	185	95
100' x 100'	375	240	95
110' x 110'	455	240	135
120' x 120'	540	305	135
130' x 130'	635	375	185

ROOM SPACING FOR CEILING-MOUNTED VISIBLE APPLIANCES

MAXIMUM ROOM SIZE	MAXIMUM LENS HEIGHT	MINIMUM REQUIRED LIGHT OUTPUT (EFFECTIVE INTENSITY) ; ONE LIGHT (cd)
20' x 20'	10	15
30' x 30'	10	30
40' x 40'	10	60
44' x 44'	10	75
50' x 50'	10	95
53' x 53'	10	110
55' x 55'	10	115
59' x 59'	10	135
63' x 63'	10	150
68' x 68'	10	177
70' x 70'	10	185
20' x 20'	20	30
30' x 30'	20	45
44' x 44'	20	75
46' x 46'	20	80
50' x 50'	20	95
53' x 53'	20	110
55' x 55'	20	115
59' x 59'	20	135
63' x 63'	20	150
68' x 68'	20	177
70' x 70'	20	185
20' x 20'	30	55
30' x 30'	30	75
50' x 50'	30	95
53' x 53'	30	110
55' x 55'	30	115
59' x 59'	30	135
63' x 63'	30	150
68' x 68'	30	177
70' x 70'	30	185

GARCIA GALUSKA DESOUSA INC.
CONSULTING ENGINEERS
370 Faunce Corner Road, Dartmouth, MA 02747 - 1271
508 - 998 - 5700 FAX 508 - 998 - 0883 E - MAIL info@g - g - d . com

ARCHITECTS • PROJECT MANAGERS
DORE & WHITTIER ARCHITECTS, INC.
Burlington, VT 05401
212 Battery Street
P : 802.863.1428
F : 802.863.6955
Newburyport, MA 01950
260 Merrimac Street, Bldg 7
P : 978.499.2999
F : 978.499.2944
www.doreandwhittier.com

Project No. 14-690

WESTFORD FIRE STATION
65 Boston Road
Westford, MA 01886

COPYRIGHT © 2014 by Dore & Whittier Architects Inc. (D&W) These documents are D&W's instruments of service and as such D&W retains all copyrights, common law and statutory rights. Use of these documents without D&W's express, written permission will result in copyright infringement.

SCHEMATIC DESIGN

REVISION:	Date:

DATE: 11/21/2015	SCALE:
DRAWN BY: MLP	CHK'D BY: Checker

SHEET TITLE: FIRE ALARM RISER

SHEET #: E400

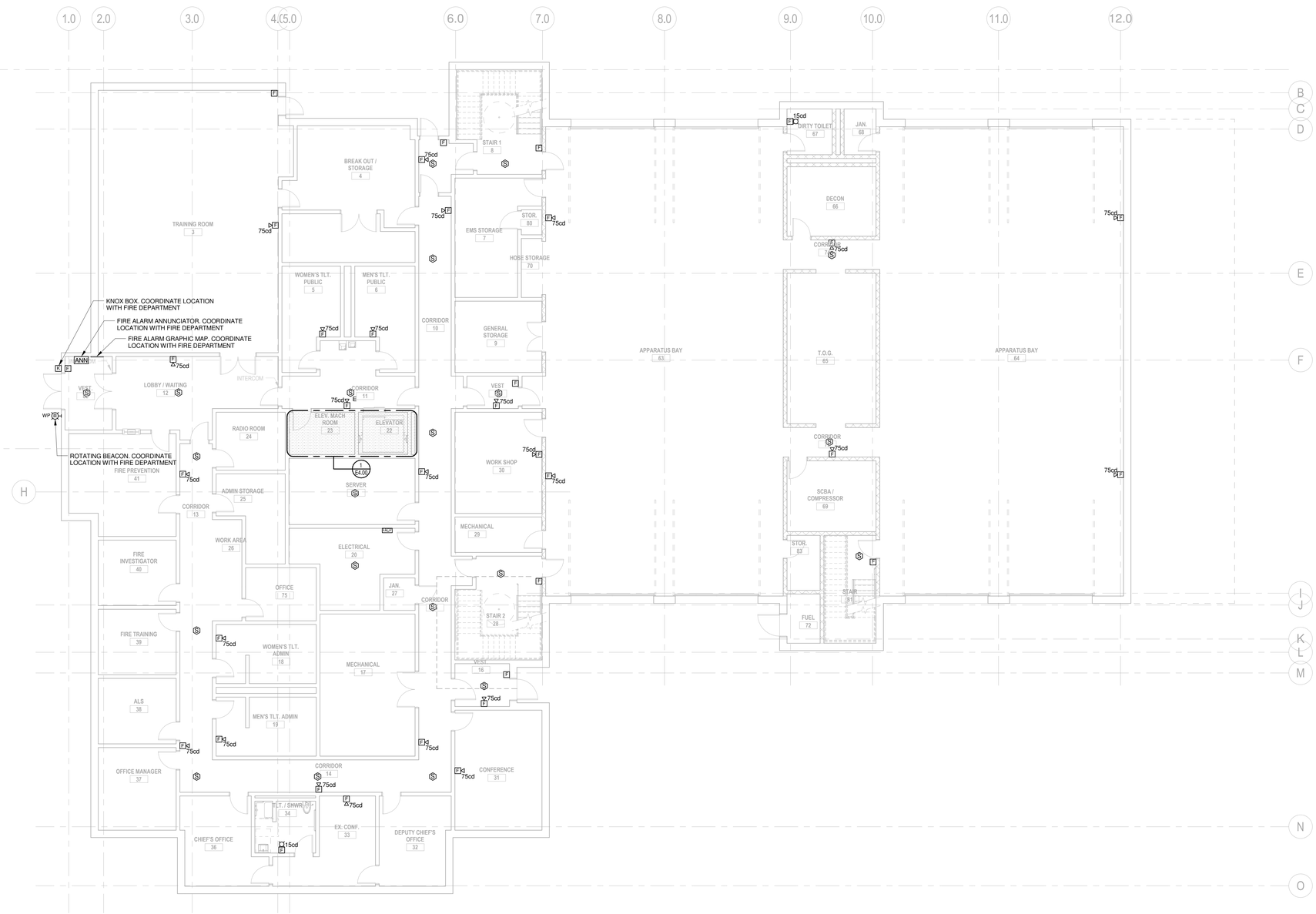

1 FIRST FLOOR PLAN - FIRE ALARM
1/8" = 1'-0"

GENERAL FIRE ALARM NOTES:

1. E.C. SHALL REFER TO SPECIFICATIONS AND DRAWINGS FOR QUANTITY OF DEVICES, SPARE CAPACITY, PARTS, ETC.
2. E.C. SHALL REFER TO HVAC DRAWINGS FOR EXACT LOCATION OF HVAC UNITS AND FOR LOCATIONS OF DUCT MOUNTED SMOKE DETECTORS. DUCT DETECTORS FURNISHED AND WIRED BY E.C.; INSTALLED BY HVAC.
3. PROVIDE EACH FIRE ALARM TERMINAL CABINET AND FIRE ALARM CONTROL PANEL WITH AN ADA POWER SUPPLY TO SERVE ALL SPEAKER/STROBE UNITS ON RESPECTIVE FLOORS.
4. TYPICALLY FIRE ALARM SYSTEM POWER CONDUCTORS SHALL BE #14 AWG, TYPE THHN SOLID. ALL WIRING SHALL BE INSTALLED IN CONDUIT OR SURFACE METAL RACEWAY. MC CABLE IS ALLOWED WHERE CONCEALED.
5. TYPICALLY ALL SPEAKER/STROBE UNITS SHALL BE WIRED IN A FASHION THAT THE SPEAKER & STROBE IS SILENCED SIMULTANEOUSLY.
6. ALL ELECTRICAL ROOMS ARE (2) HOUR RATED. FIREPROOF PENETRATIONS AS REQUIRED.
7. TYPICALLY REFER TO DOOR HARDWARE, SCHEDULES & DRAWINGS FOR LOCATIONS & QUANTITIES OF HARDWARE EQUIPMENT AFFECTING THIS SECTION. PROVIDE ALL WORK AS REQUIRED.
8. COORDINATE FINAL LOCATIONS OF MAGNETIC DOOR HOLDERS AND OTHER HARDWARE DEVICES WITH HARDWARE SUPPLIER PRIOR TO ROUGHING.
9. TYPICALLY PROVIDE (1) MONITOR MODULE FOR EACH CARBON MONOXIDE DETECTOR. ALSO CONNECT CO DETECTORS TO SECURITY SYSTEM FOR REMOTE CENTRAL STATION REPORTING.
10. MECHANICAL EQUIPMENT, MOTORIZED FIRE/SMOKE DAMPER - FURNISHED & INSTALLED BY HVAC CONTRACTOR, WIRED BY E.C.. FIRE ALARM INTERLOCK WIRING BY E. C. PROVIDE A CONTROL MODULE FOR EACH UNIT AND INTERLOCK EACH DAMPER SO THAT DAMPER IS POWERED OPEN AND IS SPRING CLOSED. LOCATE CONTROL MODULES ADJACENT TO DAMPERS. REFER TO HVAC DRAWINGS FOR DAMPER LOCATIONS. CONNECT TO THE NEAREST 120 VOLT BRANCH CIRCUIT.
11. ALL PULL STATIONS TO BE PROVIDED WITH TAMPERPROOF COVERS WITH LOCAL ALARM.
12. CONNECT CONTROL MODULE TO FIRE SHUTTER CONTROL PANEL TO RELEASE UPON ANY FIRE ALARM CONDITION OR AS DIRECTED BY FIRE DEPT. COORDINATE LOCATIONS OF FIRE SHUTTERS WITH ARCHITECT.
13. MECHANICAL EQUIPMENT, MOTORIZED FIRE/SMOKE DAMPER - FURNISHED AND INSTALLED BY HVAC CONTRACTOR 120V AND FIRE ALARM INTERLOCK WIRING BY E. C. PROVIDE A CONTROL MODULE, FOR EACH UNIT AND INTERLOCK EACH DAMPER SO THAT DAMPER IS POWERED OPEN AND IS SPRING CLOSED. LOCATE CONTROL MODULES ADJACENT TO DAMPERS. REFER TO HVAC DRAWINGS FOR DAMPER LOCATIONS.
14. ALL PULL STATIONS IN APPARATUS BAYS, LOCKER ROOMS, MECH RMS, ETC. TO HAVE STOPPER II COVERS. (*)
15. E.C. SHALL FURNISH DUCT TYPE SMOKE DETECTOR FOR INSTALLATION BY HVAC. E.C. SHALL WIRE FOR ACTUATION OF ADJACENT SMOKE DAMPER PER INTERNATIONAL MECHANICAL CODE (IMC) 2009, 607.3.3.2.1.

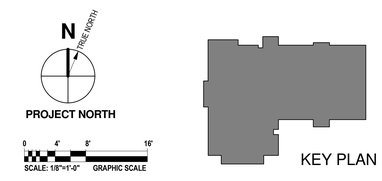

GARCIA GALUSKA DESOUSA
CONSULTING ENGINEERS
375 Totten Pond Road Waltham, MA 02451
508 . 998 . 5700 FAX 508 . 998 . 0883 E - MAIL info@g - g - d . com

ARCHITECTS • PROJECT MANAGERS
DORE & WHITTIER ARCHITECTS, INC.
Burlington, VT 05401
T : 802 . 863 . 1538
F : 802 . 863 . 1435
Northampton, MA 01060
260 Merrimac Street, Bldg 7
T : 978 . 499 . 9260
F : 978 . 499 . 2944
www.doreandwhittier.com

Project No.
14-690

WESTFORD FIRE STATION

65 Boston Road
Westford, MA 01886

COPYRIGHT © 2014 by Dore & Whitter Architects Inc. (D&W). These documents are D&W's instruments of service and as such D&W retains all copyright, common law and statutory rights. Use of these documents without D&W's express, written permission will result in copyright infringement.

SCHEMATIC DESIGN

REVISION:	Date:

DATE: 11/21/2015	SCALE: As indicated
DRAWN BY: MLP	CHK'D BY: DMP

SHEET TITLE:
FIRST FLOOR PLAN - FIRE ALARM

SHEET #:
E401

11/20/2015 2:31:46 PM C:\Users\Mike_Phillips\Documents\MEP - 690 - WESTFORD FIRE STATION_MLPhillips.rvt

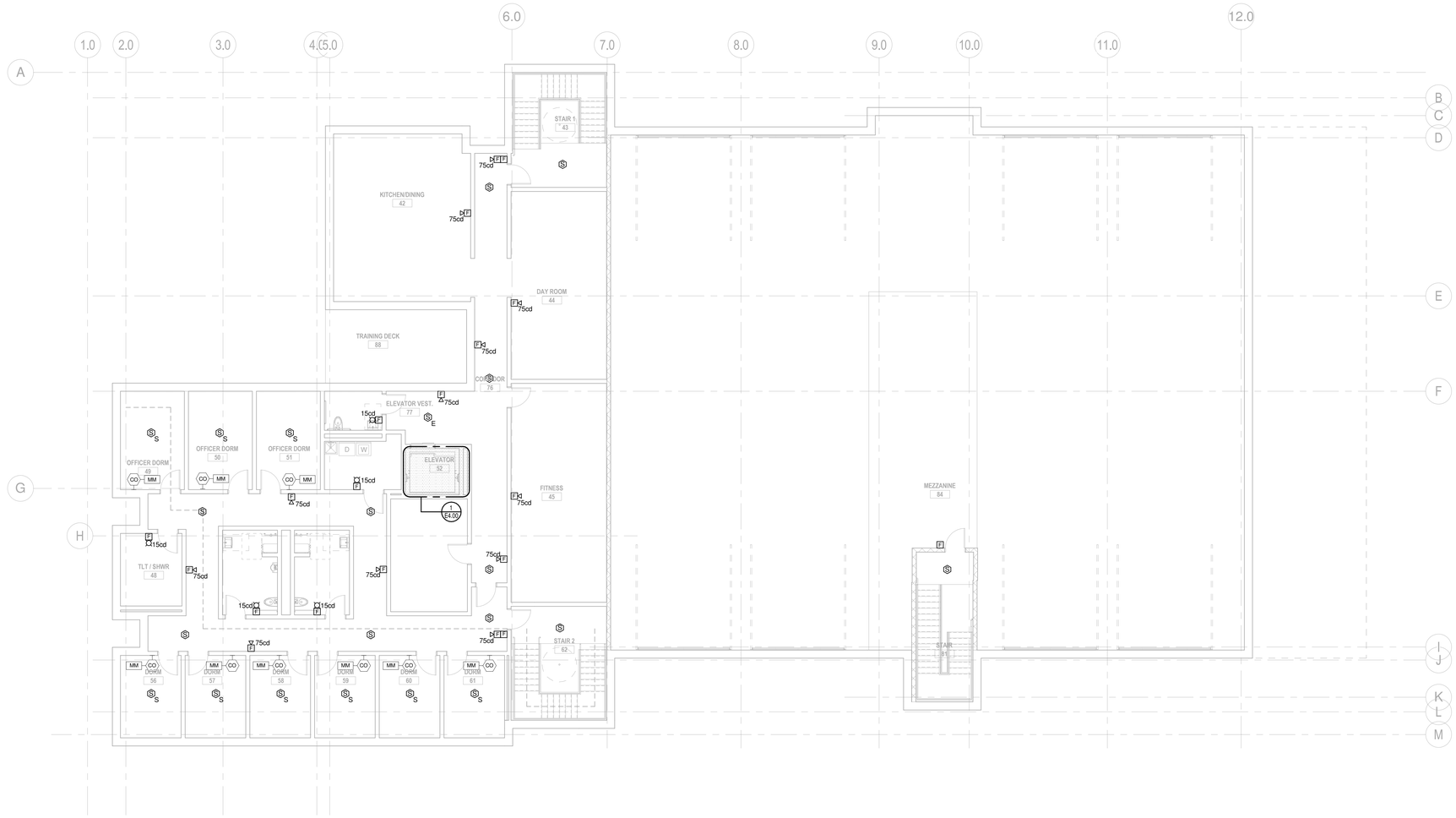

1 SECOND FLOOR PLAN - FIRE ALARM
1/8" = 1'-0"

GENERAL FIRE ALARM NOTES:

1. E.C. SHALL REFER TO SPECIFICATIONS AND DRAWINGS FOR QUANTITY OF DEVICES, SPARE CAPACITY, PARTS, ETC.
2. E.C. SHALL REFER TO HVAC DRAWINGS FOR EXACT LOCATION OF HVAC UNITS AND FOR LOCATIONS OF DUCT MOUNTED SMOKE DETECTORS. DUCT DETECTORS FURNISHED AND WIRED BY E.C.; INSTALLED BY HVAC.
3. PROVIDE EACH FIRE ALARM TERMINAL CABINET AND FIRE ALARM CONTROL PANEL WITH AN ADA POWER SUPPLY TO SERVE ALL SPEAKER/STROBE UNITS ON RESPECTIVE FLOORS.
4. TYPICALLY FIRE ALARM SYSTEM POWER CONDUCTORS SHALL BE #14 AWG. TYPE THHN SOLID. ALL WIRING SHALL BE INSTALLED IN CONDUIT OR SURFACE METAL RACEWAY. MC CABLE IS ALLOWED WHERE CONCEALED.
5. TYPICALLY ALL SPEAKER/STROBE UNITS SHALL BE WIRED IN A FASHION THAT THE SPEAKER & STROBE IS SILENCED SIMULTANEOUSLY.
6. ALL ELECTRICAL ROOMS ARE (2) HOUR RATED. FIREPROOF PENETRATIONS AS REQUIRED.
7. TYPICALLY REFER TO DOOR HARDWARE, SCHEDULES & DRAWINGS FOR LOCATIONS & QUANTITIES OF HARDWARE EQUIPMENT AFFECTING THIS SECTION. PROVIDE ALL WORK AS REQUIRED.
8. COORDINATE FINAL LOCATIONS OF MAGNETIC DOOR HOLDERS AND OTHER HARDWARE DEVICES WITH HARDWARE SUPPLIER PRIOR TO ROUGHING.
9. TYPICALLY PROVIDE (1) MONITOR MODULE FOR EACH CARBON MONOXIDE DETECTOR. ALSO CONNECT CO DETECTORS TO SECURITY SYSTEM FOR REMOTE CENTRAL STATION REPORTING.
10. MECHANICAL EQUIPMENT, MOTORIZED FIRE/SMOKE DAMPER - FURNISHED & INSTALLED BY HVAC CONTRACTOR, WIRED BY E.C.. FIRE ALARM INTERLOCK WIRING BY E. C. PROVIDE A CONTROL MODULE FOR EACH UNIT AND INTERLOCK EACH DAMPER SO THAT DAMPER IS POWERED OPEN AND IS SPRING CLOSED. LOCATE CONTROL MODULES ADJACENT TO DAMPERS. REFER TO HVAC DRAWINGS FOR DAMPER LOCATIONS. CONNECT TO THE NEAREST 120 VOLT BRANCH CIRCUIT.
11. ALL PULL STATIONS TO BE PROVIDED WITH TAMPERPROOF COVERS WITH LOCAL ALARM.
12. CONNECT CONTROL MODULE TO FIRE SHUTTER CONTROL PANEL TO RELEASE UPON ANY FIRE ALARM CONDITION OR AS DIRECTED BY FIRE DEPT. COORDINATE LOCATIONS OF FIRE SHUTTERS WITH ARCHITECT.
13. MECHANICAL EQUIPMENT, MOTORIZED FIRE/SMOKE DAMPER - FURNISHED AND INSTALLED BY HVAC CONTRACTOR 120V AND FIRE ALARM INTERLOCK WIRING BY E. C. PROVIDE A CONTROL MODULE, FOR EACH UNIT AND INTERLOCK EACH DAMPER SO THAT DAMPER IS POWERED OPEN AND IS SPRING CLOSED. LOCATE CONTROL MODULES ADJACENT TO DAMPERS. REFER TO HVAC DRAWINGS FOR DAMPER LOCATIONS.
14. ALL PULL STATIONS IN APPARATUS BAYS, LOCKER ROOMS, MECH RMS, ETC. TO HAVE STOPPER II COVERS. (*)
15. E.C. SHALL FURNISH DUCT TYPE SMOKE DETECTOR FOR INSTALLATION BY HVAC. E.C. SHALL WIRE FOR ACTUATION OF ADJACENT SMOKE DAMPER PER INTERNATIONAL MECHANICAL CODE (IMC) 2009, 607.3.3.2.1.

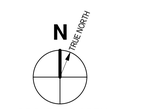

PROJECT NORTH

0 4' 8' 16'
SCALE: 1/8"=1'-0" GRAPHIC SCALE

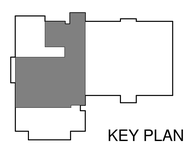

KEY PLAN

GARCIA GALUSKA DESOUSA
CONSULTING ENGINEERS
375 Totten Pond Road Waltham, MA 02451
508 . 998 . 5700 FAX 508 . 998 . 0883 E - MAIL info@g - g - d . com

ARCHITECTS • PROJECT MANAGERS
Brattleboro, VT 05401
P : 802 . 257 . 5141
F : 802 . 257 . 5145
Newburyport, MA 01950
260 Merrimac Street, Bldg 7
P : 978 . 499 . 2929
F : 978 . 499 . 2944
www.doreandwhittier.com
DORE & WHITTIER ARCHITECTS, INC.

Project No.
14-690

WESTFORD FIRE STATION

65 Boston Road
Westford, MA 01886

COPYRIGHT © 2014 by Dore & Whittier Architects Inc. (D&W). These documents are D&W's instruments of service and as such D&W retains all copyrights, common law and statutory rights. Use of these documents without D&W's express, written permission will result in copyright infringement.

SCHEMATIC DESIGN

REVISION:	Date:

DATE:	SCALE:
11/21/2015	As indicated
DRAWN BY: MLP	CHK'D BY: DMP

SHEET TITLE:
SECOND FLOOR PLAN - FIRE ALARM

SHEET #:
E402

11/20/2015 2:31:47 PM C:\Users\Mike_Phillips\Documents\MEP - 690 - WESTFORD FIRE STATION_MLPhillips.rvt

SYMBOL LIST

LEGEND NOTES:

A. THIS SHEET IS A GENERAL LIST OF SYMBOLS AND ABBREVIATIONS AND SHALL BE USED AS A DICTIONARY TO DEFINE ITEMS INDICATED ON DRAWINGS. NOT ALL SYMBOLS OR ABBREVIATIONS ARE NECESSARILY USED ON THIS PROJECT. ALL EQUIPMENT IS TO BE PROVIDED UNDER THIS SECTION UNLESS SPECIFICALLY INDICATED OTHERWISE.

SECURITY SYSTEM (addressable)

DOME IP CAMERA. E.C. TO PROVIDE SINGLE GANG OPENING AND 4"SQ.X2 1/2"DP. J.B. & 3/4" CONDUIT WITH PULL STRING TO ACCESSIBLE ABOVE CEILING SPACE AT EACH LOCATION.
WP=WEATHERPROOF
PTZ= PAN/TILT/ZOOM
F = CAT6 ONLY FOR FUTURE CAMERA

KP — INTRUSION ALARM LCD KEYPAD
SINGLE GANG BOX, 3/4" CONDUIT W/ PULL STRING TO NEAREST ACCESSIBLE CEILING SPACE BY E.C.

PT — POWER SUPPLY FOR ELECTRIFIED HARDWARE FURNISHED BY DOOR HARDWARE CONTRACTOR. INSTALLED & WIRED BY E.C. 120VAC EMERGENCY BY E.C. INTERFACE WIRING BY E.C.

REX — REQUEST TO EXIT PANIC DEVICE SHALL BE CRASH BAR W/BUILT IN MICROSWITCH. CRASH BAR FURNISHED AND INSTALLED BY DOOR HARDWARE CONTRACTOR AND WIRED BY E.C. PROVIDE 3/4" CONDUIT W/ PULL STRING TO NEAREST ACCESSIBLE CEILING SPACE BY E.C.

DC — DOOR POSITION SWITCH - GE/SENTROL 1078DB DOUBLE POLE DEVICE ONE POLE TO ACESS CONTROL, SECOND POLE TO INTRUSION. COORDINATE HOLE WITH DOOR HARDWARE. PROVIDE 3/4" CONDUIT w/ PULL STRING TO NEAREST ACCESSIBLE CEILING SPACE BY E.C.

CR — HID iCLASS RK40 COMBINATION ICLASS READER AND KEYPAD. CUSTOM BACK BOX FURNISHED AND INSTALL BY E.C. 3/4" CONDUIT W/PULL STRING TO NEAREST ACCESSIBLE CEILING SPACE BY E.C..

711 — DMP ADDRESSABLE INPUT MODULE - SEE ONE LINE FOR REQUIRED ADDRESSING - EACH DEVICE COMES WITH THE APPROPRIATE EOL RESISTOR. DOES NOT REQ/ BACK BOX

M — MOTION SENSOR - WALL MOUNTED
SINGLE GANG BACK BOX W/3/4"C WITH PULL STRING TO NEAREST ACCESSIBLE CEILING SPACE BY E.C.

M — MOTION SENSOR - CEILING MOUNTED -360°
SINGLE GANG BACK BOX AND 3/4"C WITH PULL STRING TO NEAREST ACCESSIBLE CEILING SPACE BY E.C.

M — MOTION SENSOR - CORNER MOUNTED FOR 90° PATTERN
SINGLE GANG BACK BOX AND 3/4"C WITH PULL STRING TO NEAREST ACCESSIBLE CEILING SPACE BY E.C.

M — MOTION SENSOR - FOR LONG RANGE - CEILING MOUNTED
SINGLE GANG BACK BOX AND 3/4"C WITH PULL STRING TO NEAREST ACCESSIBLE CEILING SPACE BY E.C.

M — MOTION SENSOR - FOR 360° PATTERN
SINGLE GANG BACK BOX AND 3/4"C WITH PULL STRING TO NEAREST ACCESSIBLE CEILING SPACE BY E.C.

716 — INTRUSION ALARM REMOTE ADDRESSABLE MODULE IN ENCLSOURE SURFACE MOUNT 340E ENCLOSIRE - INCLUDE IN LOOP AS REQUIRED/AS SHOWN

IACP — INTRUSION ALARM CONTROL PANEL WITH BUILT IN DIGITAL COMMUNICATOR DMP XR500-L-G, REQUIRES 120VAC, INTERFACE TO ACCESS CONTROL AND TELEPHONE CONNECTION TO POD WITH BATTERIES.

IAPS — INTRUSION ALARM POWER SUPPLY - ONE LOCATED AT EACH IDF DESIGNATED - SUPPORT MOTION DETECTOR DC VOLTAGE - REQUIRES 120VAC, MODEL DMP 502-12-G W/ BATTERIES BY E.C.

B — BLUE SECURITY ALARM BEACON, WEATHERPROOF,
SINGLE GANG BOX, 3/4" CONDUIT W/ PULL STRING TO NEAREST ACCESSIBLE CEILING SPACE BY E.C.

SECURITY PANIC BUTTON.
SINGLE GANG BOX, 3/4" CONDUIT & PULL STRING TO NEAREST ACCESSIBLE CEILING SPACE BY E.C.

IESS — INTEGRATED ELECTRONIC SAFETY & SECURITY SYSTEM HEADEND

ACP — WALL MOUNTED ACCESS CONTROLLER. E.C. SHALL PROVIDE 20A EMERGENCY CIRCUIT AND DOUBLE DUPLEX RECEPTACLE. (SEE SPECS)

KVM — RACK MOUNTED MONITOR AND KVM SWITCH

ACS — ACCESS CONTROL SYSTEM CONTROLLER, RACK MOUNT CONTROLLER. E.C. SHALL PROVIDE 20A EMERGENCY CIRCUIT AND DOUBLE DUPLEX RECEPTACLE. (SEE SPECIFICATIONS)

SW — HP PROCURVE POE NETWORK SWITCH WITH FIBER MODULES PROVIDE PORTS AS REQUIRED (SEE SPECS)

SWC — HP PROCURVE POE NETWORK CORE SWITCH WITH FIBER MODULES PROVIDE PORTS AS REQUIRED (SEE SPECS)

SVR — SERVER FOR VIDEO STORAGE PROVIDE 1 PER 25 CAMERS (SEE SPECIFICATIONS)

TVM — 42" LCD CCTV COLOR MONITOR W/ WALL/CEILING MOUNT BRACKET. E.C. TO PROVIDE 120 VAC EMERGENCY POWER RECEPTACLE, & 3/4" CONDUIT IN SINGLE GANG BOX W/ PULL STRING. MOUNT OUTLET AND BOX AT 96" A.F.F. U.N.O.

IC — EXTERIOR DOOR VIDEO INTERCOM STATION. INTERFACE TO INTERCOM SYSTEM TO ALLOW FOR RECORDING, CAMERA CALL-UP IF EXTERIOR INTERCOM STATIONS ARE ACTIVATED. COORDINATE AS REQUIRED WITH SUPPLIER. DUAL GANG BOX, 3/4" CONDUIT & PULL STRING TO NEAREST ACCESSIBLE CEILING SPACE BY E.C.

IMS — DOOR INTERCOM MASTER STATION. SINGLE GANG BOX, 3/4" CONDUIT & PULL STRING TO NEAREST ACCESSIBLE CEILING SPACE BY E.C.

EH — ELECTRIC HINGE OR ELECTRONIC POWER TRANSFER BETWEEN DOOR AND FRAME. FURNISHED AND INSTALLED BY DOOR HARDWARE CONTRACTOR (SEE DOOR HARDWARE SECTIONS FOR DETAILS), WIRED BY SECURITY 4"SQ.X2 1/2"DP. J.B. WITH 3/4" CONDUIT W/ PULL STRING TO NEAREST ACCESSIBLE CEILING SPACE BY E.C.

EL — ELECTRIC LOCK FURNISHED AND INSTALLED BY HARDWARE CONTRACTOR. 4"SQ.X2 1/2"DP. J.B. WITH 3/4" CONDUIT W/ PULL STRING TO NEAREST ACCESSIBLE CEILING SPACE BY E.C.

DJ — 4" SQ. DOOR JUNCTION BOX BY EC.

SC — SECURITY MONITOR MODULE

KEY NOTES

1. LOCAL AREA NETWORK IS BY OTHERS. INTERFACE IESS TO NETWORK TO ALLOW ANY NETWORKED PC TO VIEW ALARM EVENTS, LIVE OR RECORDED VIDEO AND SYSTEM SCHEDULES. VIEWING SOFTWARE TO BE WEB-BASED. SYSTEMS THAT REQUIRE CLIENT SOFTWARE TO BE USED WILL NOT BE ACCEPTABLE.
3. TYPICALLY EXTERIOR CAMERA LOCATIONS FURNISH AND INSTALL DAY/NIGHT DOME CAMERAS WITH HEATER BLOWERS AT THESE LOCATIONS. SEE SPECIFICATIONS FOR ADDITIONAL DETAILS.
4. INTERFACE IESS TO INTERCOM SYSTEM TO ALLOW FOR RECORDING, CAMERA CALL-UP IF EXTERIOR INTERCOM STATIONS ARE ACTIVATED. COORDINATE AS REQUIRED WITH SUPPLIER.
5. PROVIDE INTEGRATED ELECTRONIC SECURITY SERVER COMPLETE WITH 4 HOUR UPS BACK-UP. PROVIDE SOFTWARE FOR UNLIMITED NUMBER OF USERS, DOORS, AND 100 WORKSTATIONS.
6. PROVIDE (3) KEYFOBS/PROX CARDS IN ADDITION TO THE AMOUNT SPECIFIED IN EACH KNOX BOX FOR FIRE DEPT. USE. FOBS/CARDS SHALL BE PROGRAMMED FOR FULL ACCESS TO THE BUILDING.
7. ALL WIRING SHALL BE FURNISHED AND INSTALLED BY THE ELECTRICAL SUB-CONTRACTOR OR SUB-SUB CONTRACTOR UNDER THIS PARAGRAPH E LISTING IN ADDITION TO CONDUITS WITH PULL STRINGS INDICATED ON THE SECURITY SYMBOLS LISTED HEREIN.

WIRING LEGEND

1. INPUT - CABLE REQUIREMENTS 18AWG FOUR CONDUCTOR STRANDED NON-SHIELDED FOR DPS ONE PAIR PER POLE, FOR REX ONE PAIR SPARE
2. OUTPUT - CABLE REQUIREMENTS 18AWG TWO CONDUCTOR STRANDED, NON-SHIELDED
3. MOTION DETECTOR - CABLE REQUIREMENTS 18AWG TWO CONDUCTOR STRANDED NON SHIELDED (THIS IS FOR DC POWER ONLY IN DESIGN)
4. READER - CABLE REQUIREMENTS 20AWG THREE PAIR SHIELDED REFERENCE MODEL BELDEN 82777 FOR PLENUM RATED APPLICATIONS
5. KEYPAD - CABLE REQUIREMENTS 18AWG FOUR CONDUCTOR STRANDED NON SHIELDED
6. INTRUSION ALARM BUS - CABLE REQUIREMENT 18AWG FOUR CONDUCTOR STRANDED NON SHIELDED
7. CAT 6 PLENUM RATED UTP CABLE TO SECURITY PATCH PANEL IN MDF ROOM 210A.
8. POWER SUPPLY CABLE AND CONTROL FOR EXTERIOR PTZ CAMERA. 2#18&2#18TSP.
9. INPUT - CABLE REQUIREMENTS 18AWG TWO CONDUCTOR STRANDED NON-SHIELDED
10. (2)CAT 6 PLENUM RATED UTP CABLE TO SECURITY PATCH PANEL
11. OUTPUT - CABLE REQUIREMENTS 14AWG TWO CONDUCTOR STRANDED, NON-SHIELDED

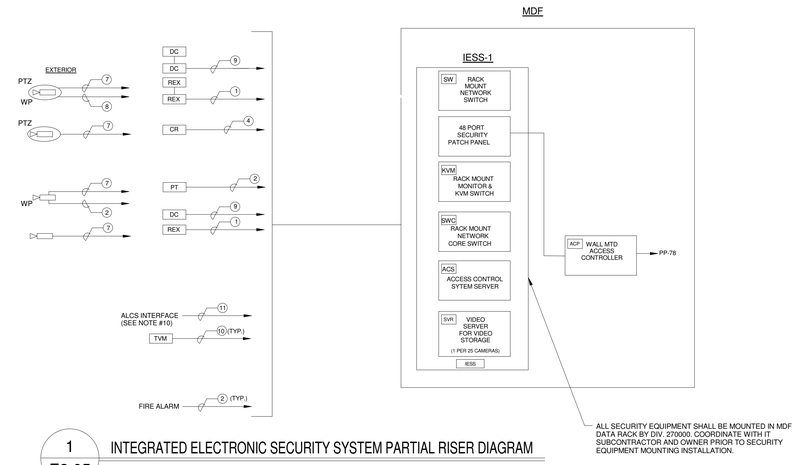

1 / E3.05 INTEGRATED ELECTRONIC SECURITY SYSTEM PARTIAL RISER DIAGRAM
SCALE: N.T.S.

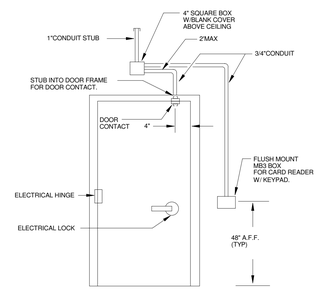

2 / E3.05 TYPICAL DOOR W/ ACCESS CONTROL
SCALE: N.T.S.

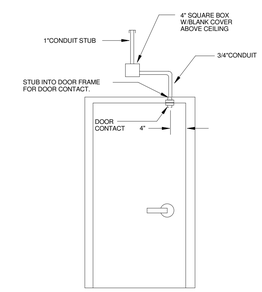

3 / E3.05 TYPICAL DOOR WITHOUT ACCESS CONTROL
SCALE: N.T.S.

GENERAL NOTES

1. ALL HARDWARE SETS SHALL CONTAIN INTEGRAL REQUEST TO EXIT DEVICE. E.C. SHALL TIE INTO THESE DEVICES AND INSURE PROPER OPERATION.

GARCIA GALUSKA DESOUSA
CONSULTING ENGINEERS
37 MAIN STREET, MARLBORO, MA 02772 - MVC
508 - 968 - 5700 FAX 508 - 968 - 0983 E - MAIL info@g - g - d .com

ARCHITECTS • PROJECT MANAGERS
Brattleboro, VT 05401
T : 802 . 257 . 5141
F : 802 . 257 . 1435
Northampton, MA 01060
T : 413 . 586 . 8686
F : 413 . 586 . 8688
Newburyport, MA 01950
260 Merrimac Street, Bldg 7
Newburyport, MA 01950
T : 978 . 499 . 2900
F : 978 . 499 . 2944
www.doreandwhitter.com
DORE & WHITTER ARCHITECTS, INC.

Project No. 14-690

WESTFORD FIRE STATION

65 Boston Road
Westford, MA 01886

COPYRIGHT © 2014 by Dore & Whitter Architects Inc. (D&W). These documents are D&W's instruments of service and as such D&W retains all copyrights, common law and statutory rights. Use of these documents without D&W's express, written permission will result in copyright infringement.

SCHEMATIC DESIGN

REVISION:	Date:

DATE: 11/21/2015
SCALE:
DRAWN BY: MLP
CHK'D BY: Checker

SHEET TITLE: SECURITY RISER & DETAILS

SHEET #: E500

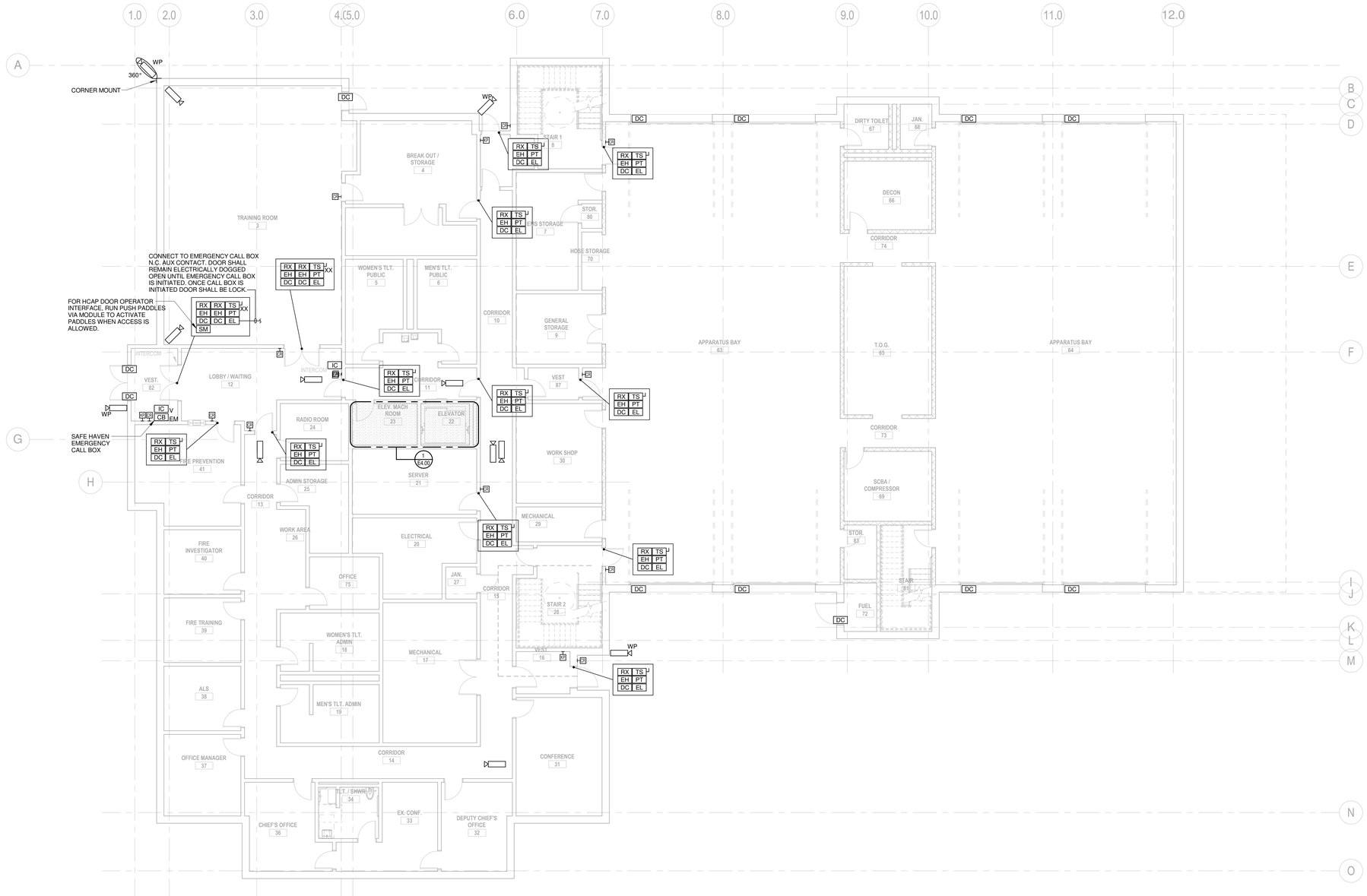

1 FIRST FLOOR PLAN - SECURITY
1/8" = 1'-0"

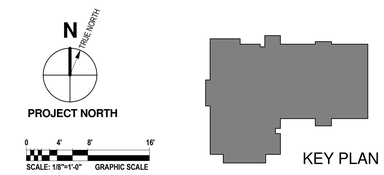

GARCIA GALUSKA DESOUSA
CONSULTING ENGINEERS
37 Stillwater Avenue, Bangor, ME 04401
508 - 998 - 5700 FAX 508 - 998 - 0883 E - MAIL info@g - g - d . com

ARCHITECTS • PROJECT MANAGERS
Brattleboro, VT 05401
T : 802 . 257 . 5177
F : 802 . 257 . 5185
Northampton, MA 01060
Northampton Street Bldg 7
T : 413 . 586 . 2350
F : 978 . 499 . 2944
www.doreandwhitter.com
DORE & WHITTER ARCHITECTS, INC.

Project No.
14-690

WESTFORD FIRE STATION

65 Boston Road
Westford, MA 01886

COPYRIGHT © 2014 by Dore & Whitter Architects Inc. (D&W). These documents are D&W's instruments of service and as such D&W retains all copyrights, common law and statutory rights. Use of these documents without D&W's express, written permission will result in copyright infringement.

SCHEMATIC DESIGN

REVISION:	Date:

DATE: 11/21/2015	SCALE: 1/8" = 1'-0"
DRAWN BY: MLP	CHK'D BY: Checker

SHEET TITLE:
FIRST FLOOR PLAN - SECURITY

SHEET #:
E501

11/20/2015 2:31:47 PM C:\Users\Mike_Phillips\Documents\MEP - 690 - WESTFORD FIRE STATION_MLPhillips.rvt

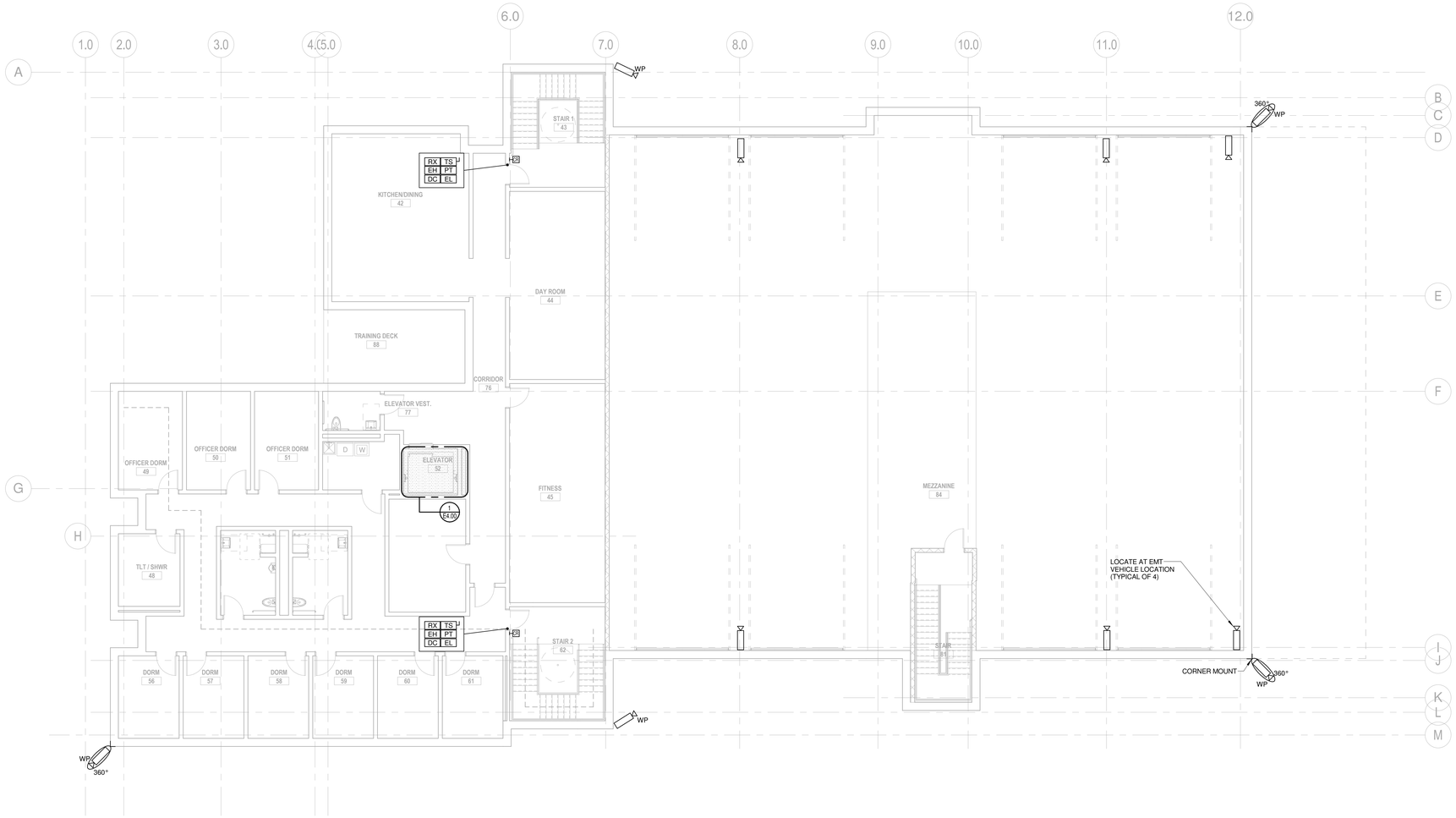

1 SECOND FLOOR PLAN - SECURITY
1/8" = 1'-0"

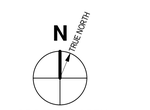

PROJECT NORTH

0 4' 8' 16'
SCALE: 1/8"=1'-0" GRAPHIC SCALE

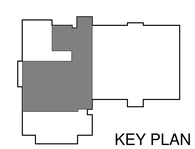

KEY PLAN

GARCIA GALUSKA DESOUSA
CONSULTING ENGINEERS
375 Totten Pond Road, Waltham, MA 02451
508 . 988 . 5700 FAX 508 . 988 . 0983 E - MAIL info@g - g - d . com

ARCHITECTS • PROJECT MANAGERS
DORE & WHITTIER ARCHITECTS, INC.
Brattleboro, VT 05401
1 . 802 . 257 . 7751
F : 802 . 863 . 1435
Northampton, MA 01060
F : 413 . 586 . 8080
Newburyport, MA 01950
260 Merrimac Street, Bldg 7
P : 978 . 499 . 9260
F : 978 . 499 . 2944
www.doreandwhittier.com

Project No.
14-690

WESTFORD FIRE STATION

65 Boston Road
Westford, MA 01886

COPYRIGHT © 2014 by Dore & Whitter Architects Inc. (D&W). These documents are D&W's instruments of service and as such D&W retains all copyrights, common law and statutory rights. Use of these documents without D&W's express, written permission will result in copyright infringement.

SCHEMATIC DESIGN

REVISION:	Date:

DATE: 11/21/2015	SCALE: 1/8" = 1'-0"
DRAWN BY: MLP	CHK'D BY: Checker

SHEET TITLE:
SECOND FLOOR PLAN - SECURITY

SHEET #:
E502

11/20/2015 2:31:48 PM C:\Users\Mike_Phillips\Documents\MEP - 690 - WESTFORD FIRE STATION_MLPhillips.rvt

SYMBOL LIST

TEL/DATA OUTLETS

W	WALL MOUNTED TELEPHONE OUTLET @ 48" A.F.F. REFER TO TEL/DATA RISER FOR WIRING REQUIREMENTS. COVER PLATES SHALL BE STAINLESS STEEL.
#	WALL MOUNTED DATA OUTLET @ 18" A.F.F REFER TO TEL/DATA RISER FOR WIRING REQUIREMENTS. NUMERAL INDICATES NUMBER OF RJ45 JACKS ON SAME FACEPLATE. COVER PLATES SHALL BE STAINLESS STEEL.
#V/#D	COMBINATION TEL/DATA OUTLET @ 18" A.F.F. #V INDICATES NUMBER OF RJ11 VOICE JACKS, #D INDICATES NUMBER OF RJ45 DATA JACKS ON SAME FACEPLATE. (1) VOICE & (1) DATA IF #V/#D IS NOT SHOWN (TYPICAL). REFER TO TEL/DATA RISER FOR WIRING REQUIREMENTS. COVER PLATES SHALL BE STAINLESS STEEL.
AN	WIRELESS ACCESS NODE - DATA REFER TO TEL/DATA RISER FOR WIRING REQUIREMENTS. COVER PLATES SHALL BE STAINLESS STEEL.
TVC	VIDEO OUTLET REFER TO TEL/DATA RISER FOR WIRING REQUIREMENTS. COVER PLATES SHALL BE STAINLESS STEEL.
TVE	VIDEO OUTLET REFER TO TEL/DATA RISER FOR WIRING REQUIREMENTS. COVER PLATES SHALL BE STAINLESS STEEL.
LCD	VIDEO OUTLET REFER TO TEL/DATA RISER FOR WIRING REQUIREMENTS. COVER PLATES SHALL BE STAINLESS STEEL.
T	TECH. STATION REFER TO TEL/DATA RISER FOR WIRING REQUIREMENTS COVER PLATES SHALL BE STAINLESS STEEL. MOUNTED @ 18" A.F.F. U.N.O.

MISCELLANEOUS

MDF	MAIN DISTRIBUTION FRAME

RECEPTACLES

	FLUSH FLOOR OUTLET BOXES WITH BOTH 120 VOLT & TELE/DATA COMPARTMENTS FLOOR BOX BY OTHERS. BRASS COVER PLATE BY I.T. CONTRACTOR.
	FLUSH FLOOR OUTLET BOXES WITH BOTH 120 VOLT & DATA COMPARTMENTS. FLOOR BOX BY OTHERS. BRASS COVER PLATE BY I.T. CONTRACTOR.
	WIREMOLD RACEWAY PROVIDED UNDER SECTION 16000

ABBREVIATIONS

A.F.F.	ABOVE FINISHED FLOOR	P.C.	PLUMBING CONTRACTOR
A.F.G.	ABOVE FINISHED GRADE	M.H.	MOUNTING HEIGHT
ARCH.	ARCHITECT	W.P.	WEATHER PROOF
A.T.C.	AUTO-TEMP CONTROL CONTRACTOR	U.N.O.	UNLESS NOTED OTHERWISE
℄	CENTERLINE	WG	WIRE GUARD
CLG.	CEILING	CATV	CABLE TELEVISION
E.C.	ELECTRICAL CONTRACTOR	DH	DOOR HOLDER
F&I	FURNISHED AND INSTALLED	F.A.C.P.	FIRE ALARM CONTROL PANEL
F.P.C.	FIRE PROTECTION CONTRACTOR	PAC	PUBLIC ACCESS COMPUTER
G.C.	GENERAL CONTRACTOR	MAC	MACINTOSH COMPUTER
H.V.A.C.	HEATING, VENTILATION, AND AIR CONDITIONING CONTRACTOR	I.T.	INFORMATION TECHNOLOGY

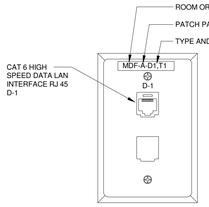

1 / T001 TYPICAL DATA OUTLET(▽) DETAIL
NOT TO SCALE

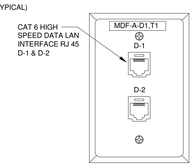

2 / T001 TYPICAL DATA OUTLET(℄▽)DETAIL
NOT TO SCALE

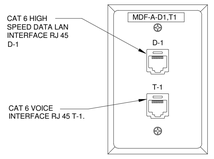

3 / T001 TYPICAL WALL MTD VOICE/DATA OUTLET(▼) DETAIL
NOT TO SCALE

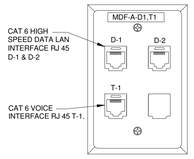

4 / T001 TYPICAL WALL MTD VOICE/DATA 1V/2D OUTLET (▼) DETAIL
NOT TO SCALE

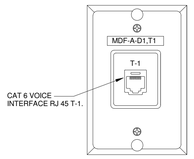

5 / T001 TYPICAL WALL PHONE OUTLET(W ▼) DETAIL
NOT TO SCALE

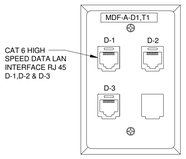

6 / T001 TYPICAL DATA OUTLET(℄▽) DETAIL
NOT TO SCALE

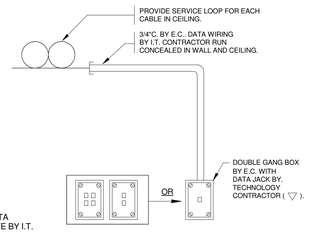

7 / T001 DATA OUTLET DETAIL
NOT TO SCALE

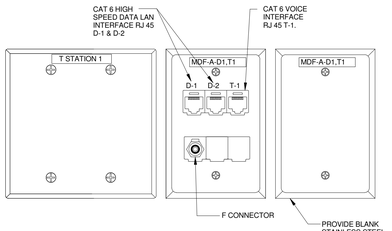

8 / T001 TYPICAL TECH. STATION OUTLET(T) DETAIL
NOT TO SCALE

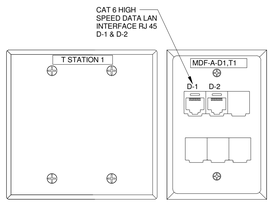

9 / T001 LCD PROJECTOR JACK OUTLET (TVE) DETAIL
NOT TO SCALE

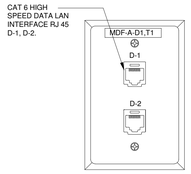

10 / T001 TYPICAL OPTIJACK AN OUTLET (▽) DETAIL
NOT TO SCALE

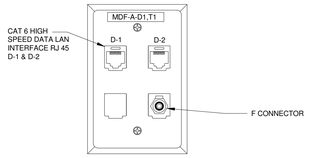

11 / T001 TYPICAL CABLE/DATA JACK OUTLET (TVC) DETAIL
NOT TO SCALE

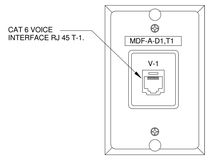

12 / T001 TYPICAL VERIZON PHONE OUTLET(V ▼)DETAIL
NOT TO SCALE

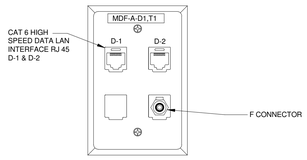

13 / T001 TYPICAL CABLE/DATA JACK OUTLET (LCD) DETAIL
NOT TO SCALE

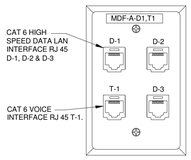

14 / T001 TYPICAL WALL MTD VOICE/DATA 1V/3D OUTLET (▼) DETAIL
NOT TO SCALE

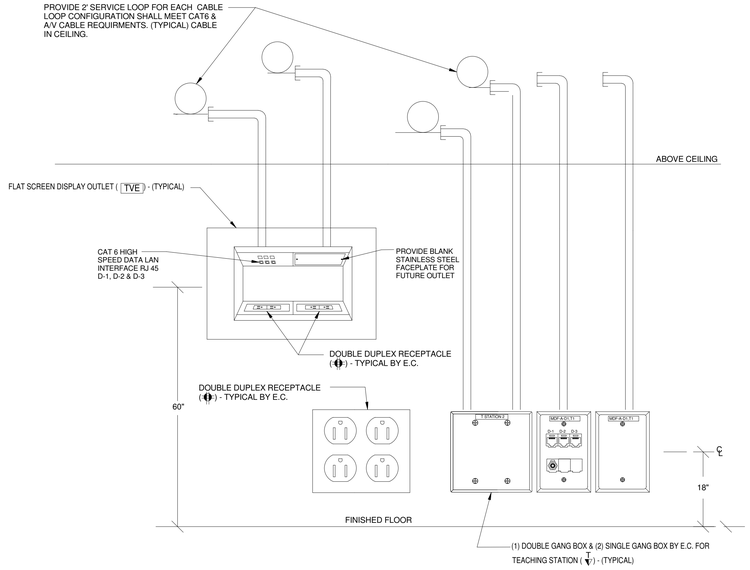

15 / T001 TYPICAL TECH. STATION JACK OUTLET(T TVE) DETAIL
NOT TO SCALE

GARCIA GALUSKA DESOUSA
CONSULTING ENGINEERS
37 Stillwater Avenue, Maynard, MA 01754
508 . 897 . 5700 FAX 508 . 897 . 0883 E - MAIL info@g - g - d . com

ARCHITECTS • PROJECT MANAGERS
DORE & WHITTIER ARCHITECTS, INC.
Brattleboro, VT 05401
T : 802 . 863 . 1455
F : 802 . 863 . 1456
Northampton, MA 01060
260 Meadow Street, Bldg 7
T : 413 . 586 . 0860
F : 978 . 499 . 2944
www.doreandwhittier.com

Project No. 14-690

WESTFORD FIRE STATION

65 Boston Road
Westford, MA 01886

COPYRIGHT © 2014 by Dore & Whitter Architects Inc. (D&W). These drawings are instruments of service and as such remain property of D&W and are protected by copyright, common law and statutory rights. Use of these documents without D&W's express, written permission will result in copyright infringement.

SCHEMATIC DESIGN

REVISION:	Date:

DATE: 11/21/2015
SCALE:
DRAWN BY: MLP
CHK'D BY: Checker

SHEET TITLE: TECHNOLOGY SYMBOL LIST

SHEET #: T001

GENERAL TECHNOLOGY NOTES:

1. COMMUNICATIONS OUTLETS ARE SHOWN FOR REFERENCE PURPOSES. EXACT LOCATIONS WILL BE AS SHOWN ON ELECTRICAL DRAWINGS. COORDINATE INSTALLATION OF ALL CABLING WITH ELECTRICAL SUBCONTRACTOR.
2. KEEP COMMUNICATIONS CABLING AT LEAST 12" AWAY FROM POWER WIRING.
3. ALL CONDUITS AND JUNCTION BOXES TO BE PROVIDED UNDER DIVISION 260000. CONDUITS SHOWN ARE FOR REFERENCE ONLY.

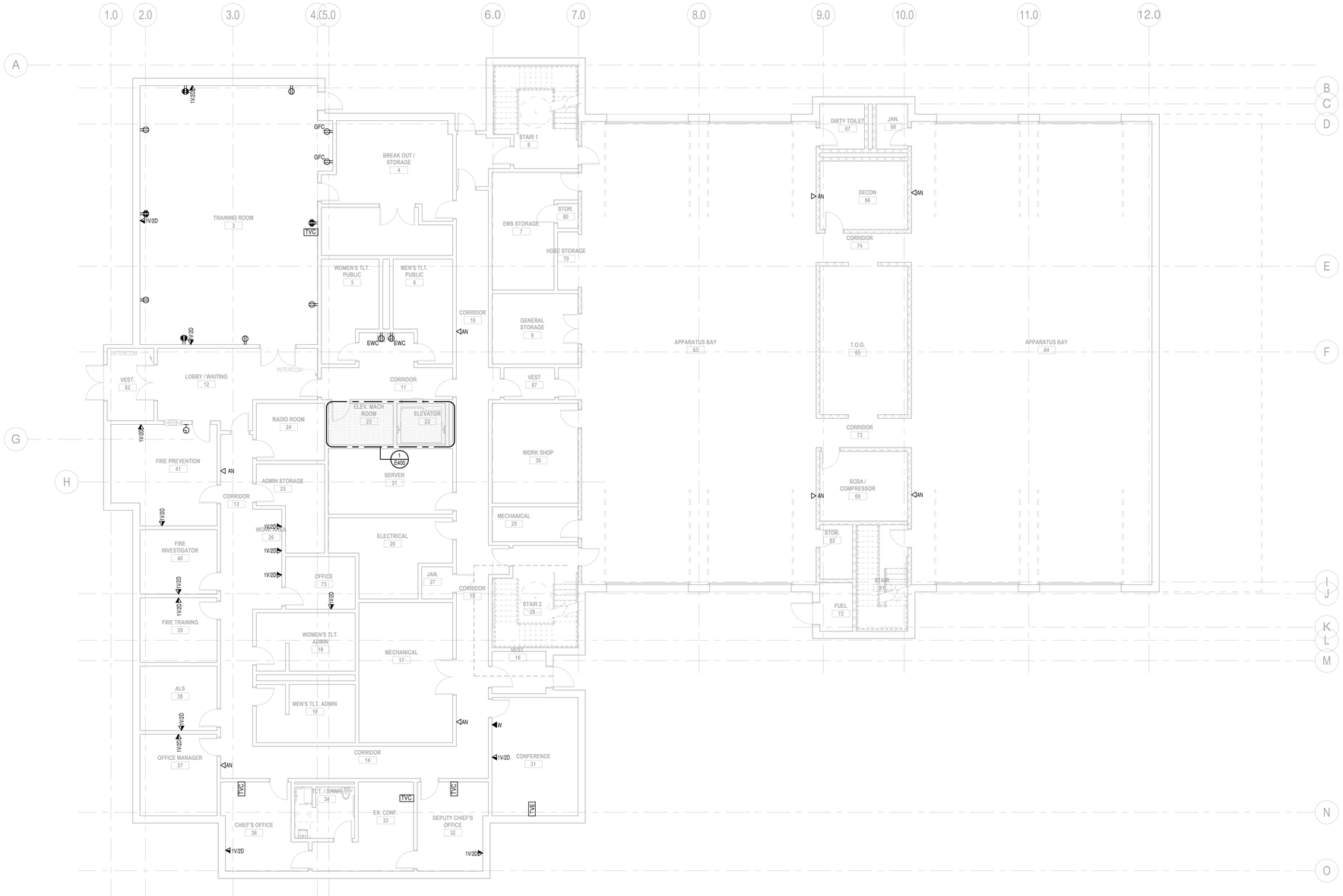

1 FIRST FLOOR PLAN -TECHNOLOGY
1/8" = 1'-0"

PROJECT NORTH

0 4' 8' 16'
SCALE: 1/8"=1'-0" GRAPHIC SCALE

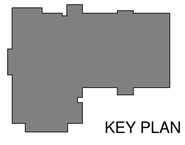

KEY PLAN

GARCIA GALUSKA DESOUSA
CONSULTING ENGINEERS
37 Stillwater Avenue, Beverly, MA 01915
508 . 968 . 5700 FAX 508 . 968 . 0983 E - MAIL info@g - g - d . com

ARCHITECTS • PROJECT MANAGERS
Burlington, VT 05401
1 0 0 C o l l e g e S t r e e t
P : 8 0 2 . 8 6 3 . 1 4 3 5
F : 8 0 2 . 8 6 3 . 1 4 3 8
Northampton, MA 01060
260 Meadow Street, Bldg 7
P : 5 7 8 . 5 8 8 . 2 0 4 0
F : 5 7 8 . 4 9 9 . 2 9 4 4
www.doreandwhitter.com
DORE & WHITTER ARCHITECTS, INC.

Project No.
14-690

WESTFORD FIRE STATION

65 Boston Road
Westford, MA 01886

COPYRIGHT © 2014 by Dore & Whitter Architects Inc. (D&W). These documents are D&W's instruments of service and as such remain the property of D&W subject to statutory rights. Use of these documents without D&W's express, written permission will result in copyright infringement.

SCHEMATIC DESIGN

REVISION:	Date:

DATE: 11/21/2015	SCALE: As indicated
DRAWN BY: MLP	CHK'D BY: Checker

SHEET TITLE:
FIRST FLOOR PLAN - TECHNOLOGY

SHEET #:
T101

GENERAL TECHNOLOGY NOTES:

1. COMMUNICATIONS OUTLETS ARE SHOWN FOR REFERENCE PURPOSES. EXACT LOCATIONS WILL BE AS SHOWN ON ELECTRICAL DRAWINGS. COORDINATE INSTALLATION OF ALL CABLING WITH ELECTRICAL SUBCONTRACTOR.
2. KEEP COMMUNICATIONS CABLING AT LEAST 12" AWAY FROM POWER WIRING.
3. ALL CONDUITS AND JUNCTION BOXES TO BE PROVIDED UNDER DIVISION 260000. CONDUITS SHOWN ARE FOR REFERENCE ONLY.

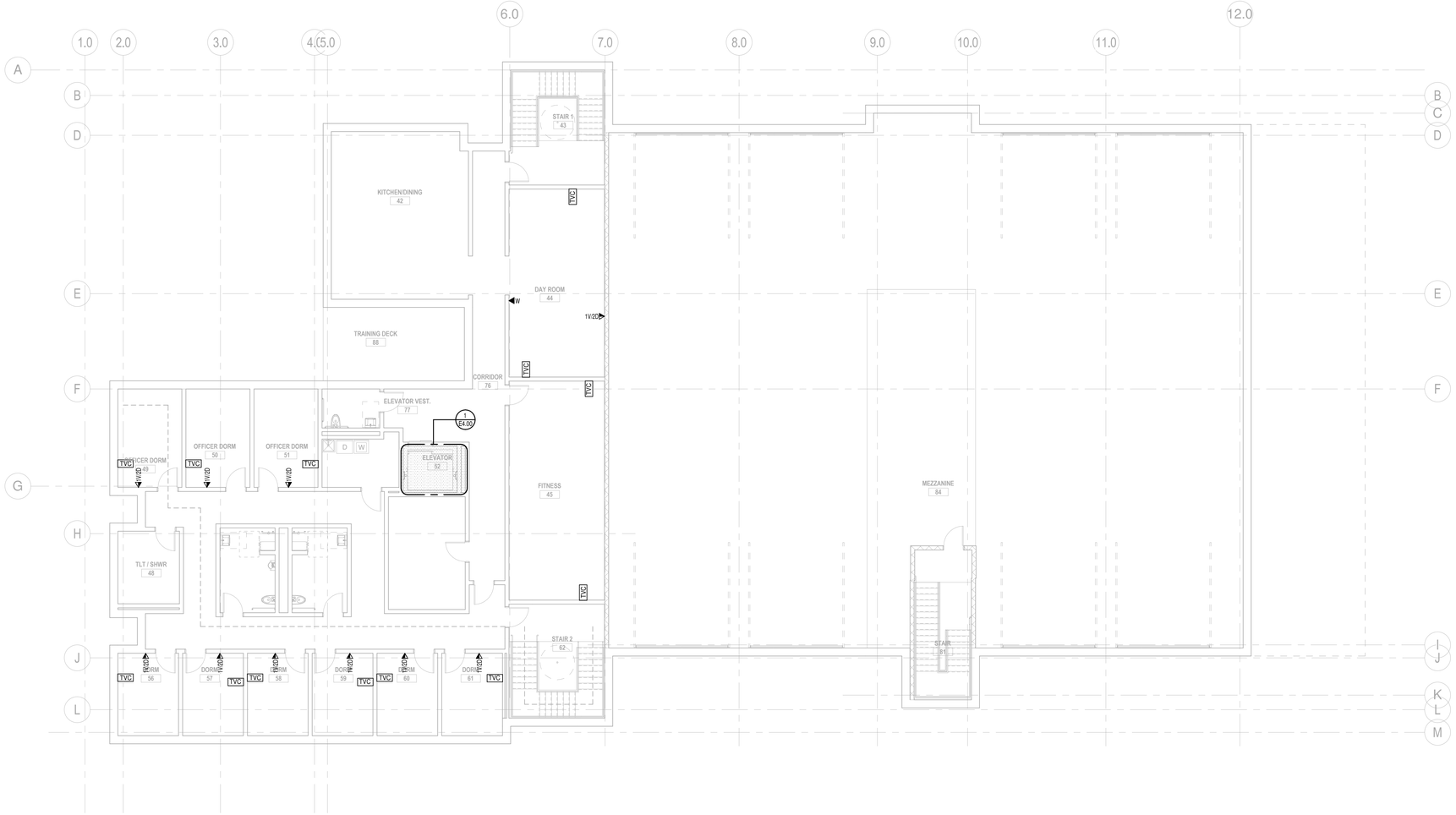

1 SECOND FLOOR PLAN -TECHNOLOGY
1/8" = 1'-0"

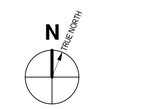

PROJECT NORTH

0 4' 8' 16'
SCALE: 1/8"=1'-0" GRAPHIC SCALE

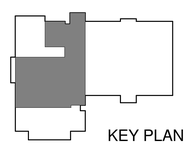

KEY PLAN

GARCIA GALUSKA DESOUSA
CONSULTING ENGINEERS
375 Totten Pond Road, Waltham, MA 02451-1921
508 - 968 - 5700 FAX: 508 - 968 - 0983 E - MAIL: info@g - g - d . com

ARCHITECTS • PROJECT MANAGERS
Burlington, VT 05401
2 - 1 Church Street
P : 802 863 1455
F : 802 863 1456
Northampton, MA 01060
260 Meadow Street, Bldg 7
P : 413 586 2350
F : 978 499 2944
www.doreandwhitter.com
DORE & WHITTER ARCHITECTS, INC.

Project No.
14-690

WESTFORD FIRE STATION

65 Boston Road
Westford, MA 01886

COPYRIGHT © 2014 by Dore & Whitter Architects Inc. (D&W). These documents are D&W's instruments of service and as such D&W retains all copyrights, common law and statutory rights. Use of these documents without D&W's express, written permission will result in copyright infringement.

SCHEMATIC DESIGN

REVISION:	Date:

DATE: 11/21/2015	SCALE: As indicated
DRAWN BY: MLP	CHK'D BY: Checker

SHEET TITLE:
SECOND FLOOR PLAN - TECHNOLOGY

SHEET #:
T102

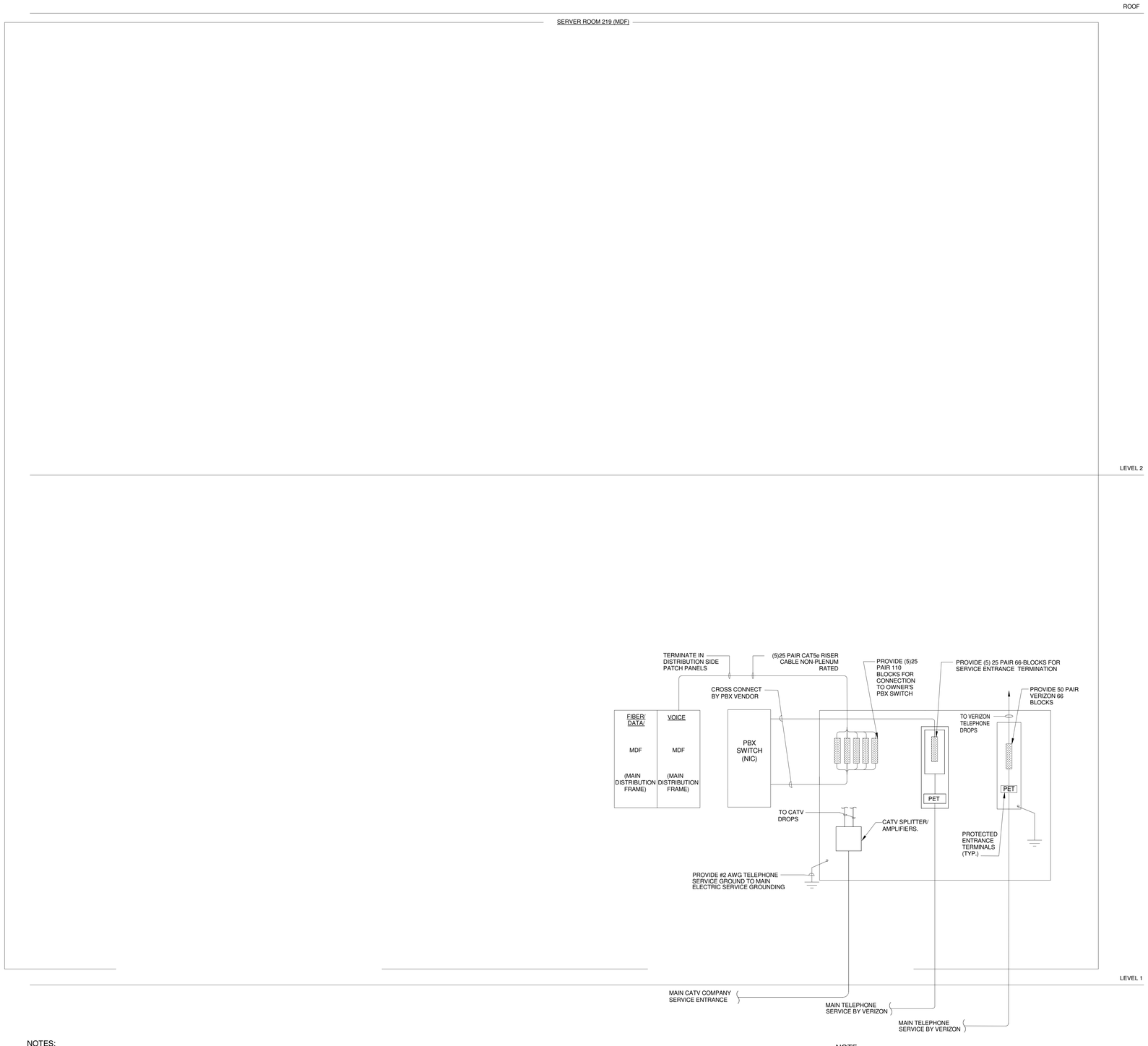

QUANTITY OF DEVICES

SERVER ROOM 219 (MDF)

		DATA	VOICE	CATV	VERIZON
▽	= -	-	-	-	-
2 ▽	= -	-	-	-	-
AN ▽	= -	-	-	-	-
▼	= -	-	-	-	-
1V/2D ▼	= -	-	-	-	-
1V/3D ▼	= -	-	-	-	-
T ▼	= -	-	-	-	-
V ▼	= -	-	-	-	-
W ▼	= -	-	-	-	-
TVC	= -	-	-	-	-
TVE	= -	-	-	-	-
LCD	= -	-	-	-	-
TOTAL		-	-	-	-

CABLE/FIBER SCHEDULE

1. FIBER OPTIC MULTIMODE LIU (LIGHTGUIDE INTERFACE UNIT) PATCH PANEL (12 PORT - ST CONNECTORS) - PREMISES DISTRIBUTION
2. FIBER OPTIC SINGLEMODE LIU (LIGHTGUIDE INTERFACE UNIT) PATCH PANEL (6 PORT - SC CONNECTORS) - PREMISES DISTRIBUTION
3. FIBER OPTIC SINGLEMODE LIU (LIGHTGUIDE INTERFACE UNIT) PATCH PANEL (12 PORT - SC CONNECTORS) - PREMISES DISTRIBUTION

MAIN DISTRIBUTION FRAME MDF

LOCATION: SERVER ROOM 219 (MDF)

CAT 6 (RJ45) VOICE PORT				CAT 6 (RJ45) DATA PORTS		
USED	SPARE	PATCH PANEL SIZE		USED	SPARE	PATCH PANEL SIZE
-	-	DISTRIBUTION	(3) 48 PORT	-	-	(-) 48 PORT
		WORKSTATION	(3) 48 PORT			

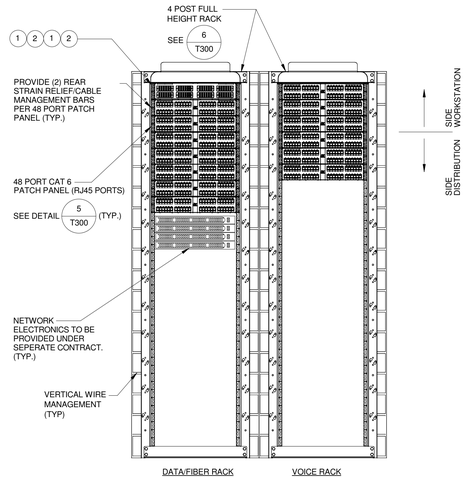

1 / T200 MDF DETAIL

NOT TO SCALE

NOTES:

1. - (1) CAT 6 UTP CABLES TO MDF/IDF DATA RACK IN BLOCKED AREA (TYPICAL)
2. - (2) CAT 6 UTP CABLES TO MDF/IDF DATA RACK IN BLOCKED AREA (TYPICAL)
3. - (1) CAT 6 UTP CABLES TO MDF/IDF VOICE RACK IN BLOCKED AREA (TYPICAL)
4. - (4) CAT 6 UTP CABLES TO MDF/IDF DATA RACK IN BLOCKD AREA
5. - (2) CAT 6 UTP CABLES TO MDF/IDF DATA RACK IN BLOCKD AREA
   - (1) CAT 6 UTP CABLE TO MDF/IDF VOICE RACK IN BLOCKED AREA
6. - (1) CAT 6 UTP CABLES TO MDF/IDF DATA RACK IN BLOCKD AREA
   - (1) CAT 6 UTP CABLE TO MDF/IDF VOICE RACK IN BLOCKED AREA
7. - (2) CAT 6 UTP CABLES TO MDF DATA RACK IN BLOCKD AREA
   - (1) RG-6 QUAD SHIELD TO MDF/IDF CATV SPLITTER IN BLOCKED AREA
8. - (1) RG-6 QUAD SHIELD TO MDF/IDF CATV SPLITTER IN BLOCKED AREA (TYPICAL)
9. - (1) CAT 6 UTP CABLES TO VERIZON 66 BLOCKS (TYPICAL)
10. - (2) CAT 6 UTP CABLES TO MDF/IDF DATA RACK IN BLOCKD AREA
    - (1) CAT 6 UTP CABLE TO MDF/IDF VOICE RACK IN BLOCKED AREA
    - (1) RG-6 QUAD SHIELD TO MDF/IDF CATV SPLITTER IN BLOCKED AREA
11. - (3) CAT 6 UTP CABLES TO MDF/IDF DATA RACK IN BLOCKD AREA
    - (1) CAT 6 UTP CABLE TO MDF/IDF VOICE RACK IN BLOCKED AREA

A. 12 STRAND MULTI-MODE FIBER CABLE TO MDF. INSTALL OUTSIDE PLANT PLENUM RATED INNER-DUCT.

B. 6 STRAND SINGLE MODE 8/9 MICRON FIBER CABLE TO MDF. INSTALL OUTISIDE PLANT PLENUM RATED INNER-DUCT.

NOTE:

1. THIS CONTRACTOR SHALL PROVIDE FOR A COMPLETE INSTALLATION. FURNISH ALL EQUIP. LABOR, WIRING AND OUTLETS REQUIRED FOR A COMPLETELY OPERATIONAL SYSTEM.
2. ALL WIRING SHALL BE IN ACCORDANCE WITH EQUIPMENT SUPPLIER. COORDINATE ALL WIRING REQUIREMENTS PRIOR TO ROUGHING-IN.
3. PROVIDE APPROPRIATE QUANTITIES OF DATA PATCH PANELS TO ACCOMMODATE ALL RESPECTIVE DATA CIRCUITS.
4. PROVIDE CAT 6 PATCH CORDS TO MATCH TOTAL QUANTITY OF PATCH PANEL PORTS. AT BOTH MDF/IDF AND WORK STATION.

GARCIA GALUSKA DESOUSA
CONSULTING ENGINEERS
375 Totten Pond Road, Waltham, MA 02451
508 - 968 - 5700 FAX 508 - 968 - 0983 E - MAIL info@g - g - d . com

ARCHITECTS • PROJECT MANAGERS
Burlington, VT 05401
P : 802 863 1455
F : 802 863 1435
Northampton, MA 01060
260 Meadow Street, Bldg 7
P : 413 586 0860
F : 413 586 0865
Newburyport, MA 01950
206 Merrimac Street, Bldg 2
P : 978 499 3940
F : 978 499 3944
www.doreandwhitter.com
DORE & WHITTER ARCHITECTS, INC.

Project No. 14-690

WESTFORD FIRE STATION

65 Boston Road
Westford, MA 01886

COPYRIGHT © 2014 by Dore & Whitter Architects Inc. (D&W) These documents are D&W's instruments of service and as such D&W retains all copyrights, common law and statutory rights. Use of these documents without D&W's express, written permission will result in copyright infringement.

SCHEMATIC DESIGN

REVISION:	Date:

DATE: 11/21/2015
SCALE:
DRAWN BY: MLP
CHKD BY: Checker

SHEET TITLE: TECHNOLOGY RISER

SHEET #: T200

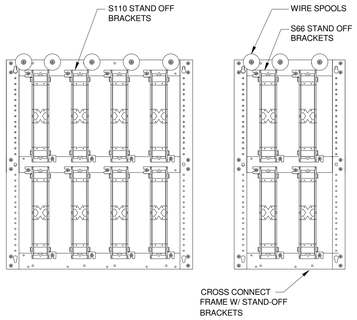

1 / T300 TYPICAL CROSS CONNECT

NOT TO SCALE

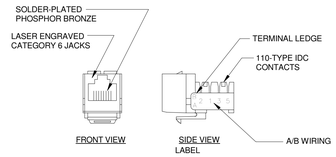

2 / T300 RJ45 CONNECTION DETAILS

NOT TO SCALE

NOTE

PANELS SHALL BE UL LISTED; MEET NATIONAL ELECTRICAL CODE REQUIREMENTS AND SPECIFICATIONS FOR UL 1863; AND FULLY COMPLY WITH FCC PART 68 AND TIA-568-A CATEGORY 6.

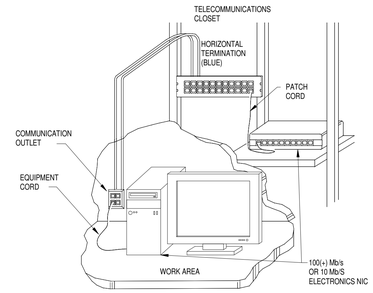

3 / T300 TYPICAL INTERCONNECTION ARCHITECTURE

NOT TO SCALE

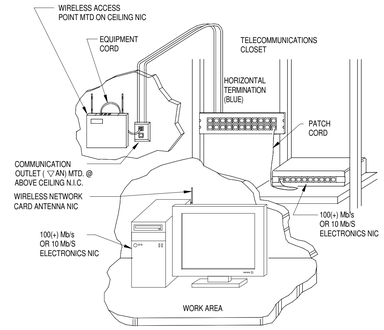

4 / T300 TYPICAL WIRELESS INTERCONNECTION ARCHITECTURE

NOT TO SCALE

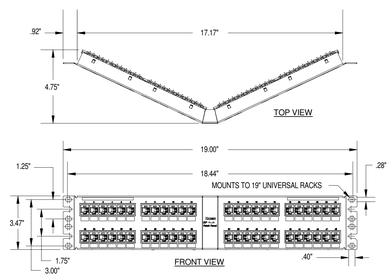

NOTES:

1. MATERIAL:
   PANEL HOUSING: STEEL
   RJ45 MODULES: THERMOPLASTIC RESIN UL94V-0
   RUNCHDOWN BLOCKS: THERMOPLASTIC RESIN UL94V-0
   BEZEL ASSEMBLY: THERMOPLASTIC RESIN UL94H-B
   RETENTION CAP: THERMOPLASTIC RESIN UL94V-0
2. 48 PORT ANGLED PATCH PANEL 8 POSITION 8 WIRE.
3. (4) 12-24 X 1/2" ROUND HEAD SCREWS AND (4) M6x1x15MM METIC SCREWS ARE PROVIDED FOR FASTENING TO RACKS.
4. USE 110 STYLE TERMINATION TOOL FOR PUNCHDOWN.
5. RETENTION CAPS (ON PER CONNECTOR) PROVIDED FOR SNAP-IN ON TERMINATED CONNECTORS.

5 / T300 48 PORT CAT 6 ANGLED PATCH PANEL

NOT TO SCALE

NOTE

PANELS SHALL BE UL LISTED; MEET NATIONAL ELECTRICAL CODE REQUIREMENTS AND SPECIFICATIONS FOR UL 1863; AND FULLY COMPLY WITH FCC PART 68 AND TIA-568-A CATEGORY 6.

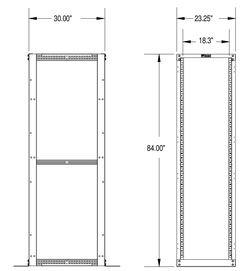

NOTES:

1. CAN BE USED WITH ANY EIA STANDARD COMPONENT IN ADDITION TO ALL PANDUIT HORIZONTAL CABLE MANAGEMENT AND PATCH PANEL PRODUCTS.
2. 45 AVAILABLE RACK SPACES.
3. RU SPACING NUMBERS ARE CLEARLY PRINTER ON MOUNTING RAILS.
4. EASY ASSEMBLY. ONE WRENCH NEEDED TO INSTALL BOLTS INTO WELDNUTS IN ALL 8 CORNERS.
5. FULLY BONDED STRUCTURE WHEN ASSEMBLED PER INSTRUCTIONS.
6. LOAD RATING - 2000 LBS.

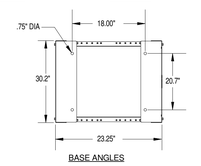

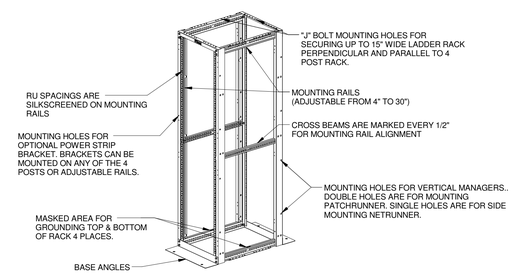

6 / T300 4 POST RACK

NOT TO SCALE

GARCIA GALUSKA DESOUSA
CONSULTING ENGINEERS
375 Totten Pond Road, Waltham, MA 02451
508 - 968 - 5700 FAX 508 - 968 - 0983 E - MAIL info@g - g - d . com

ARCHITECTS • PROJECT MANAGERS
DORE & WHITTIER ARCHITECTS, INC.
Braintree, VT 05401
P : 802 . 863 . 1460
F : 802 . 863 . 1435
Northampton, MA 01060
260 Meadow Street, Bldg 7
P : 413 . 586 . 2350
F : 413 . 586 . 2351
www.doreandwhittier.com

Project No. 14-690

WESTFORD FIRE STATION

65 Boston Road
Westford, MA 01886

COPYRIGHT © 2014 by Dore & Whitter Architects Inc. (D&W). These documents are D&W's instruments of service and as such D&W retains all copyrights, common law and statutory rights. Use of these documents without D&W's express, written permission will result in copyright infringement.

SCHEMATIC DESIGN

REVISION:	Date:

DATE: 11/21/2015
SCALE:
DRAWN BY: MLP
CHK'D BY: Checker

SHEET TITLE: TECHNOLOGY DETAILS

SHEET #: T300